PARTS LIST

トーハツ船外機
パーツ　リスト

TOHATSU

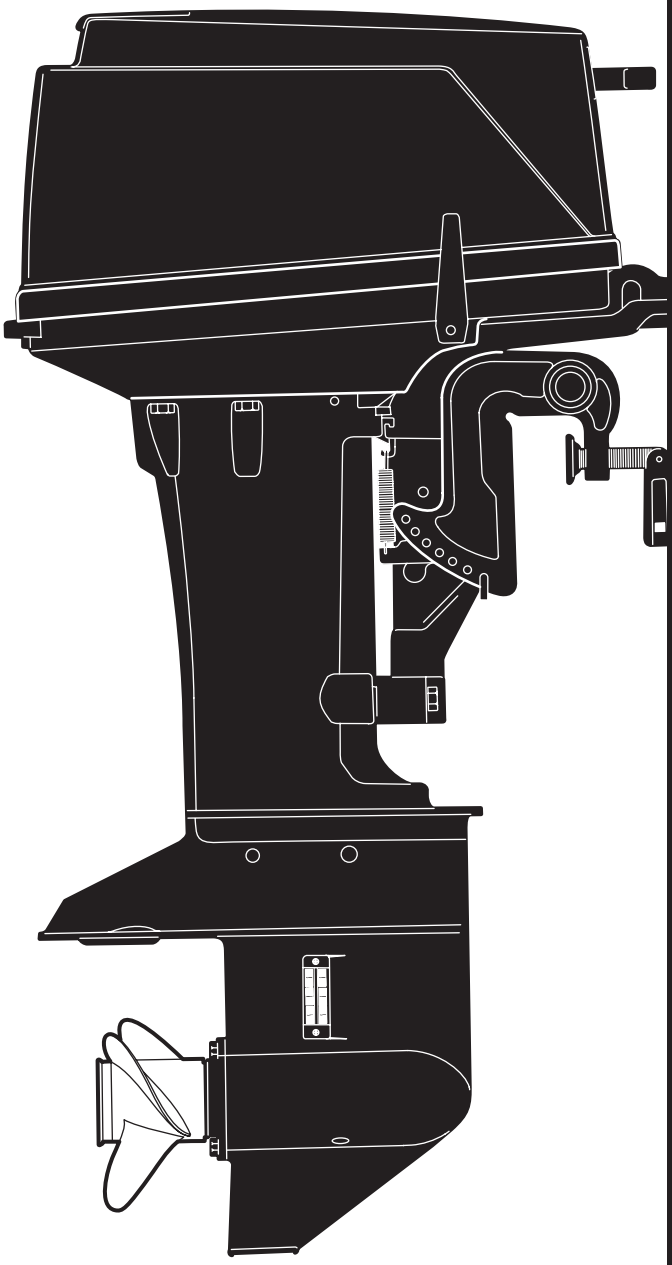

M 25C3
30A4

OB NO.002-21025-6
0601 NB 500

パーツリストのご使用について

1. このパーツリストは、トーハツ船外機を構成している部品を集録したものです。

2. 部 品の新設、廃止または、変更が生じた場合は、インフォメーション等にてお知らせ致しますので、その都度、ご訂正ください。

3. アッセンブリまたはキットでの販売部品は、その構成する部品の頭に（＊）印をつけて表わしています。

4. 本文中に記載されている記号は次の様になっています。

STD	：スタンダード	G	：ガスアシストマニアルチルト
OPT	：オプション	M	：マニアルチルト
O/S	：オーバーサイズ	F	：バーハンドルタイプ
Ass'y	：アッセンブリ	O	：オートミキシング
AR	：必要に応じて選択	P	：プレジャータイプ
E	：セルスタータタイプ	PTT	：パワートリム＆チルト

5. オーダー上の注意

1) パーツナンバの 4 桁目が "B" もしくは "Q" 記号のものは塗装されています。現在の塗装色はパワーヘッドがブラック (B)、ロワーユニットがアクアマリンブルー (Q) です。

例示 -1：パワーヘッド部品
3F3B01001-0
↓
B：ブラック

例示 -2：ロワーユニット部品
3F3Q61192-0
↓
Q：アクアマリンブルー

6. 備考欄にオールドパーツ No. が記されている部品は、パーツ No. が変更された部品ですが、部品に変更は有りません。

7. Remark 欄に "UNIQUE" もしくは "N. A. F. N." と記されている部品がありますが、特に関係ありません。

HOW TO USE THIS PARTS LIST

1. This Parts List lists the component parts of the Tohatsu outboard motors.

2. Please keep the Parts List updated each time when receiving the Service Bulletin describing the addition, abolition and/or change of parts.

3. Given mark in (∗) to part number shows assembly or kit part.

4. Marks in this Parts List show:

STD	: Standard	G	: Gas Assist Manual Tilt Type
OPT	: Optional Parts	M	: Manual Tilt Type
O/S	: Over size	F	: Tiller Handle Type
Ass'y	: Assembly	O	: Auto Mixing Type
AR	: As required	P	: Pleasure Type
E	: Electric Starter Type	PTT	: Power Trim & Tilt Type

5. Attention to order

1) Please order painted parts in accordance with following. The parts that fourth figure of the parts number is "B" or "Q" have painted.

[Example]

POWER HEAD PARTS
3F3B01001-0
↓
B : Black

LOWER UNIT PARTS
3F3Q61192-0
↓
Q : Aquamarin Blue

6. Old part numbers writtrn in the Remarks column mean that only part numbers were changed.

7. You don't care that the "UNIQUE" or the "N.A.F.N." parts written in the Remarks column.

目　　次

CONTENTS

Fig. 1 シリンダ・クランクケースアッシ
CYLINDER・CRANK CASE ASS'Y 1

Fig. 2 ピストン・クランクシャフト
PISTON・CRANK SHAFT. 5

Fig. 3 インレット・リードバルブ
INLET・REED VALVE 7

Fig. 4 キャブレタ
CARBURETOR 9

Fig. 5 フュエルポンプ
FUEL PUMP. 13

Fig. 6 マグネト
MAGNETO. 15

Fig. 7 スロットル・メカニズム
THROTTLE MECHANISM. 19

Fig. 8 バーハンドル
TILLER HANDLE. 21

Fig. 9 リコイルスタータ
RECOIL STARTER 23

Fig. 10 スタータロック
STARTER. 27

Fig. 11 ドライブシャフトハウジング・ギヤケース
DRIVESHAFT HOUSING・GEAR CASE 29

Fig. 12 トランスミッション・ウォータポンプ
TRANSMISSION・WATER PUMP 33

Fig. 13 ギヤシフト
GEAR SHIFT 37

Fig. 14 ブラケット
BRACKET 39

Fig. 15 リバースロック
REVERSE LOCK. 43

Fig. 16 モータカバー
MOTOR COVER 45

Fig. 17 セパレートフュエルタンク (プラスティック)・アクセサリー
SEPARATE FUELE TANK (PLASTIC)・ACCESSORIES 47

Fig. 18 オプショナルパーツ (I) リモートコントロール
OPTIONAL PARTS (I) REMOTE CONTROL 49

Fig. 19 オプショナルパーツ (II) エレクトリックスタータ (P, F タイプ共通)
OPTIONAL PARTS (II) ELECTRIC STARTER
(Common use for P & F types) 51

Fig. 20 オプショナルパーツ (III) エレクトリックスタータ (P, F タイプ各専用)
OPTIONAL PARTS (III) ELECTRIC STARTER
(Exclusive use for P & F types respectively). 55

Fig. 21 オプショナルパーツ (IV) アクセサリー (1)
OPTIONAL PARTS (IV) ACCESSORIES (1) 57

Fig. 22 オプショナルパーツ (V) アクセサリー (2)
OPTIONAL PARTS (V) ACCESSORIES (2) 59

Fig. 23 アッセンブリ、キット
ASSEMBLY, KIT 61

シリンダ・クランクケースアッシ

Fig. 1 CYLINDER・CRANK CASE ASS'Y

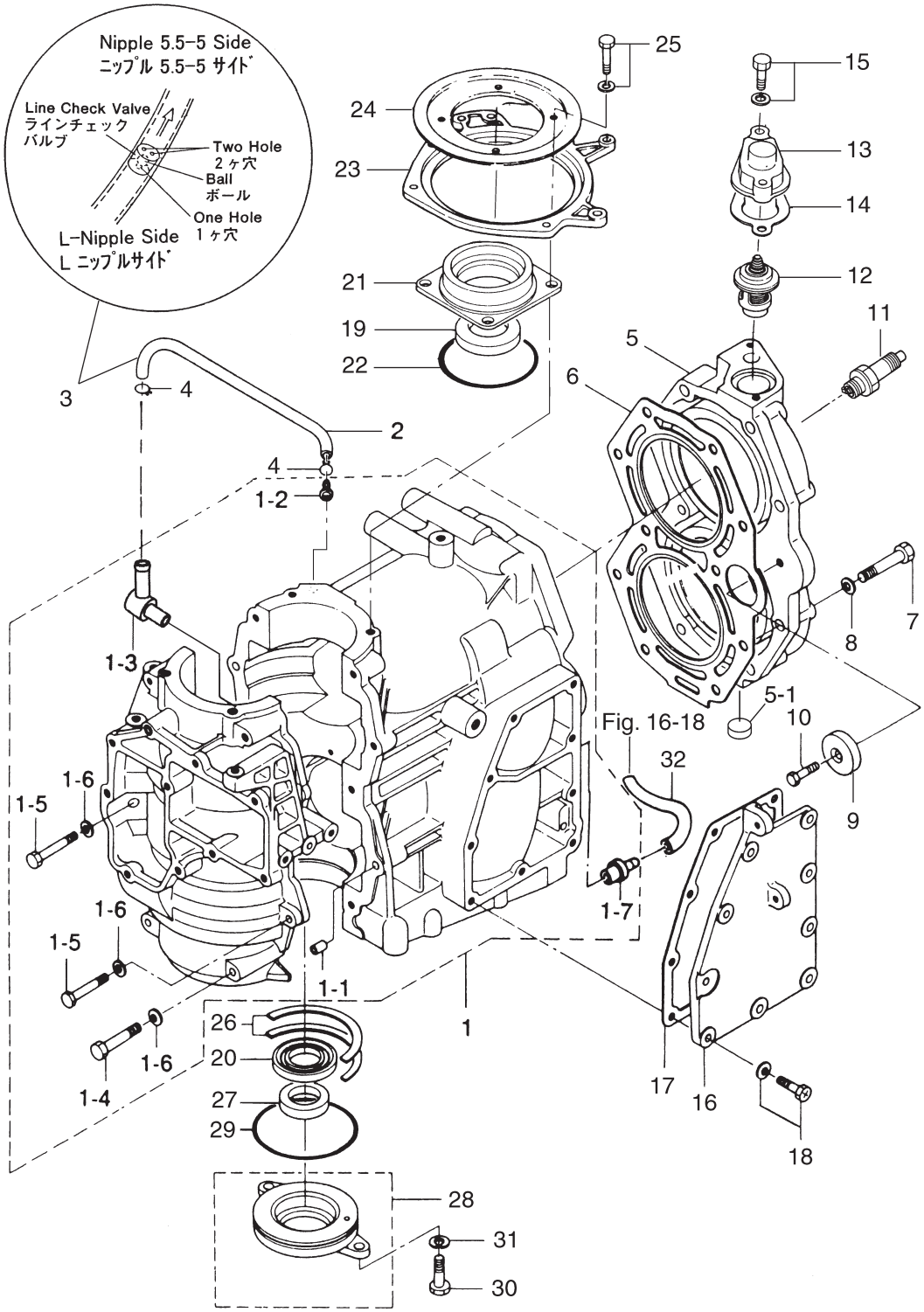

見出番号 Ref. No.	部品番号 Part No.	部　品　名 Description	個数 Q'ty 30 A4	 25 C3		備　考 Remarks
1-1	346B01100-4	ｼﾘﾝﾀﾞｰ･ｸﾗﾝｸｹｰｽ Cylinder-Crank Case	1	1		30A4 # 38568～ 25C3 # 57329～
1-1-1	336-01111-0	ﾀﾞｳｴﾙﾋﾟﾝ、8.65-11.5-12.7 ＊ Dowel Pin, 8.65-11.5-12.7	2	2		
1-1-2	393-01131-0	ﾆｯﾌﾟﾙ、5.5-5 ＊ Nipple, 5.5-5	1	1		
1-1-3	393-01137-0	L ﾆｯﾌﾟﾙ (新) ＊ L-Nipple (New)	1	1		30A4 # 38568～ 25C3 # 57329～
	3B2-01160-0	ﾁｪｯｸﾊﾞﾙﾌﾞﾆｯﾌﾟﾙ (旧) ＊ Check Valve Nipple (Old)	1	1		
1-1-4	916124-0845	ﾎﾞﾙﾄ ＊ Bolt	8	8		
1-1-5	916124-0840	ﾎﾞﾙﾄ ＊ Bolt	2	2		
1-1-6	940121-0800	ﾜｯｼｬ ＊ Washer	10	10		
1-1-7	346-01137-0	ﾆｯﾌﾟﾙ、7-7 ＊ Nipple, 7-7	1	1		
1-2	98AL-4-0220	ﾙﾌﾞﾘｹｰｼｮﾝﾎｰｽ Lubrication Hose	1	1		30A4 # 38568～ 25C3 # 57329～
1-3	393-01160-0	ﾗｲﾝﾁｪｯｸﾊﾞﾙﾌﾞ Line Check Valve	1	1		
1-4	3T5-01133-0	ｸﾘｯﾌﾟ φ8 Clip, φ8	2	2		
1-5	3A1B01001-0	ｼﾘﾝﾀﾞﾍｯﾄﾞ Cylinder Head	1	1		30A3 # 21031～ 25C2 # 27906～
1-5-1	350-01093-0	ﾍﾙﾁﾌﾟﾗｸﾞ ＊ Welch Plug	1	1		
1-6	346-01005-0	ｼﾘﾝﾀﾞﾍｯﾄﾞｶﾞｽｹｯﾄ Cylinder Head Gasket	1	1		
1-7	916119-0845	ﾎﾞﾙﾄ Bolt	10	10		
1-8	345-01015-0	ﾜｯｼｬ、8.5-19.5-3.2 Washer, 8.5-19.5-3.2	10	10		
1-9	338-60218-2	ｱﾉｰﾄﾞ Anode	1	1		
1-10	910103-0616	ﾎﾞﾙﾄ Bolt	1	1		
1-11	9701-1-1005	ｽﾊﾟｰｸﾌﾟﾗｸﾞ Spark Plug	2	2		NGK: B7HS-10
	9701-1-1015	ｽﾊﾟｰｸﾌﾟﾗｸﾞ (ﾚｼﾞｽﾀﾝｽ) Spark Plug (with Resistance)	2	2		NGK: BR7HS-10
1-12	345-01030-0	ｻｰﾓｽﾀｯﾄ Thermostat	1	1		
1-13	3H6B01031-0	ｻｰﾓｽﾀｯﾄｷｬｯﾌﾟ Thermostat Cap	1	1		
1-14	346-01032-0	ｻｰﾓｽﾀｯﾄｷｬｯﾌﾟｶﾞｽｹｯﾄ Thermostat Cap Gasket	1	1		
1-15	910114-5630	ﾎﾞﾙﾄ Bolt	2	2		
1-16	346B02301-0	ｴｷｿﾞｰｽﾄｶﾊﾞｰ Exhaust Cover	1	1		
1-17	346-02305-0	ｴｷｿﾞｰｽﾄｶﾊﾞｰｶﾞｽｹｯﾄ Exhaust Cover Gasket	1	1		
1-18	910411-5518	ﾎﾞﾙﾄ Bolt	9	9		
1-19	126-00121-0	ｵｲﾙｼｰﾙ、30-45-8 Oil Seal, 30-45-8	1	1		
1-20	346-00122-0	ｵｲﾙｼｰﾙ、24-40-8 Oil Seal, 24-40-8	1	1		

シリンダ・クランクケースアッシ
Fig. 1 CYLINDER・CRANK CASE ASS'Y

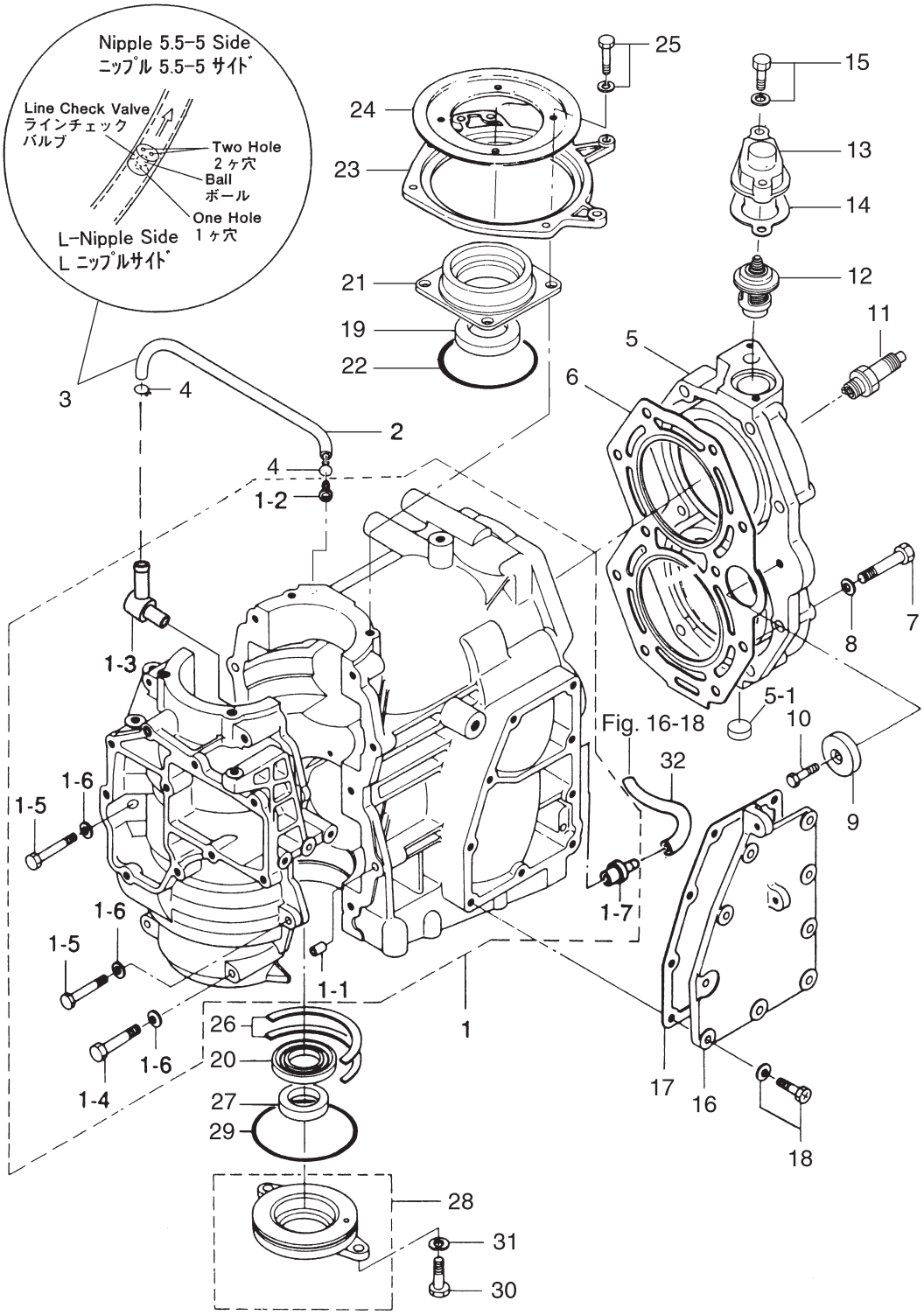

見出番号 Ref. No.	部品番号 Part No.	部　品　名 Description	個数 Q'ty 30 A4	 25 C3		備　考 Remarks
1-21	345-01401-0	ﾏｸﾞﾈﾄﾍﾞｰｽ Magneto Basement	1	1		
1-22	338-01403-0	O ﾘﾝｸﾞ、2-55.5 O-Ring, 2-55.5	1	1		
1-23	353-63723-1	ｾｯﾄﾘﾝｸﾞ Setting Ring	1	1		
1-24	346-63722-2	ｶﾞｲﾄﾞﾌﾟﾚｰﾄ Guide Plate	1	1		
1-25	910121-6620	ﾎﾞﾙﾄ Bolt	4	4		
1-26	346-00115-0	ｸﾗﾝｸｼｬﾌﾄｽﾗｽﾄﾌﾟﾚｰﾄ Crank Shaft Thrust Plate	2	2		
1-27	346-01215-0	ｵｲﾙｼｰﾙ、16-28-6 Oil Seal, 16-28-6	1	1		
1-28	346-01210-0	ｸﾗﾝｸｹｰｽﾍｯﾄﾞ Crank Case Head	1	1		
1-29	346-01216-0	O ﾘﾝｸﾞ、1.7-59 O-Ring, 1.7-59	1	1		
1-30	910114-0616	ﾎﾞﾙﾄ Bolt	2	2		
1-31	941303-0600	ｽﾌﾟﾘﾝｸﾞﾜｯｼｬ Spring Washer	2	2		
1-32	98AB-5-0250	ｳｫｰﾀﾆｯﾌﾟﾙﾎｰｽ Water Nipple Hose	1	1		

ピストン・クランクシャフト
Fig. 2 PISTON・CRANKSHAFT

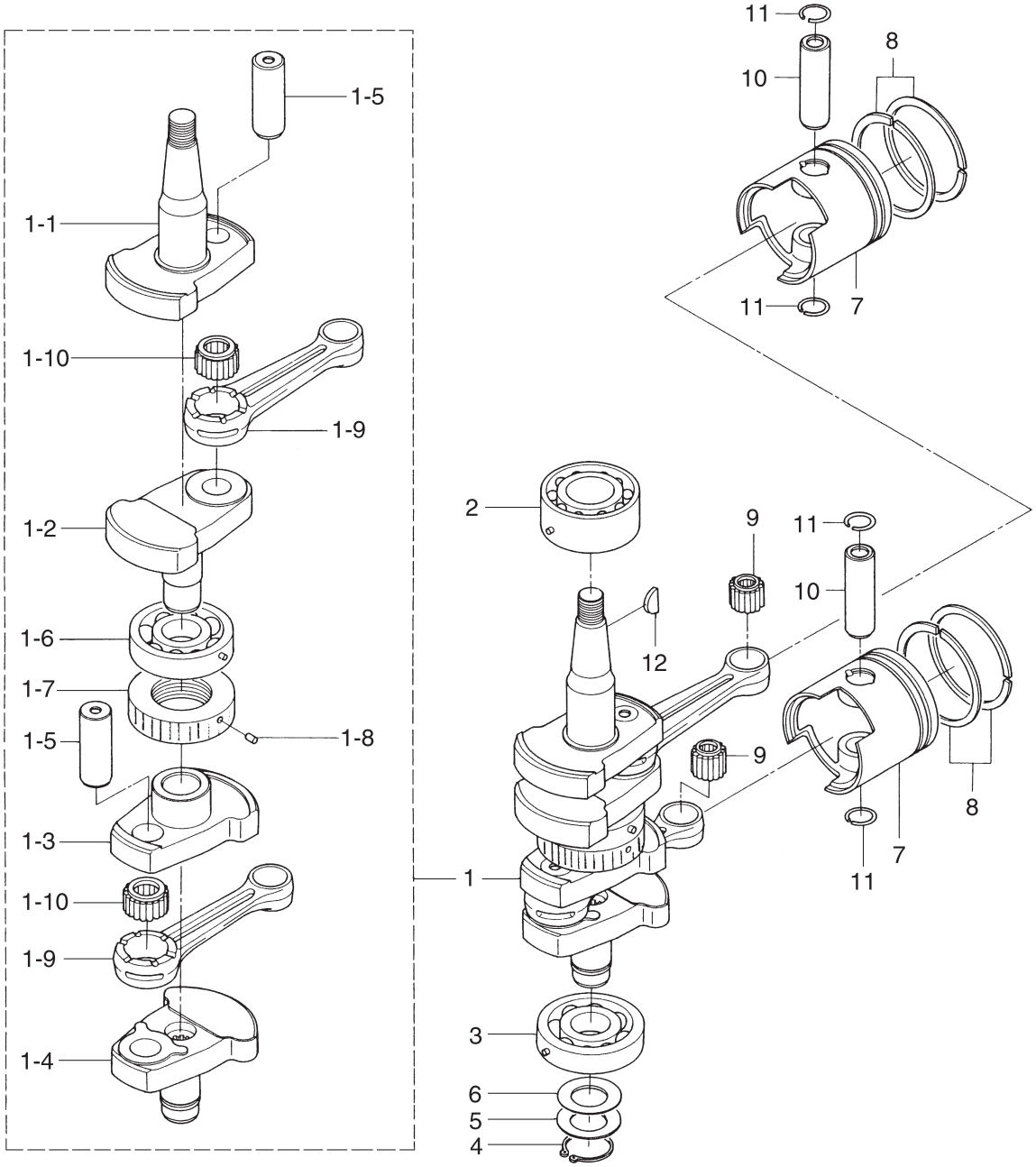

見出番号 Ref. No.	部品番号 Part No.	部　品　名 Description	個数 Q'ty 30 A4	 25 C3		備　考 Remarks
2-1	3P1-00030-0	ｸﾗﾝｸｼｬﾌﾄｱｯｼ (新) Crank Shaft Ass'y (New)	1	1		# 032359XD～ Clockwise Screw
	346-00030-1	ｸﾗﾝｸｼｬﾌﾄｱｯｼ (旧)) Crank Shaft Ass'y (Old)	(1)	(1)		～# 028071XD Counterclockwise Screw
2-1-1	3P1-00031-0	ｸﾗﾝｸｼｬﾌﾄ A (新) ＊ Crank Shaft "A" (New)	1	1		# 032359XD～ Clockwise Screw
	346-00031-0	ｸﾗﾝｸｼｬﾌﾄ A (旧) ＊ Crank Shaft "A" (Old)	(1)	(1)		～# 028071XD Counterclockwise Screw
2-1-2	346-00032-0	ｸﾗﾝｸｼｬﾌﾄ B ＊ Crank Shaft "B"	1	1		
2-1-3	346-00033-0	ｸﾗﾝｸｼｬﾌﾄ C ＊ Crank Shaft "C"	1	1		
2-1-4	346-00034-0	ｸﾗﾝｸｼｬﾌﾄ D ＊ Crank Shaft "D"	1	1		
2-1-5	334-00061-0	ｸﾗﾝｸﾋﾟﾝ ＊ Crank Pin	2	2		
2-1-6	3J2-00114-0	ﾎﾞｰﾙﾍﾞｱﾘﾝｸﾞ、6305 ＊ Ball Bearing, 6305	1	1		30A3 # 29197～ 25C2 # 38254～
2-1-7	346-00051-1	ﾗﾋﾞﾘﾝｽﾊﾟｯｷﾝ ＊ Labyrinth Packing	1	1		30A3 # 33181～ 25C2# 45535～
2-1-8	951407-0308	ｽﾌﾟﾘﾝｸﾞﾋﾟﾝ、3-8 ＊ Spring Pin, 3-8	1	1		
2-1-9	336-00040-1	ｺﾝﾛｯﾄﾞ ＊ Connecting Rod	2	2		
2-1-10	356-00043-0	ﾆｰﾄﾞﾙﾍﾞｱﾘﾝｸﾞ、20-28-18 ＊ Needle Bearing, 20-28-18	2	2		
2-2	345-00113-0	ﾎﾞｰﾙﾍﾞｱﾘﾝｸﾞ、3206 Ball Bearing, 3026	1	1		
2-3	3J2-00114-0	ﾎﾞｰﾙﾍﾞｱﾘﾝｸﾞ、6305 Ball Bearing, 6305	1	1		30A3 # 29197～ 25C2 # 38254～
2-4	945107-2500	ｸﾘｯﾌﾟ Clip	1	1		
2-5	346-00116-0	ｽﾍﾟｰｻ、25.2-34-1.6 Spacer, 25.2-34-1.6	1	1		
2-6	332-00143-0	ｼﾑ、25.5-33-0.2 Shim, 25.5-33-0.2	AR	AR		
2-7	346-00001-3	ﾋﾟｽﾄﾝ (Std) Piston (Std)	2	2		
	346-00004-3	ﾋﾟｽﾄﾝ (0.5mm O/S) Piston (0.5mm O/S)	2	2		Option
2-8	346-00011-0	ﾋﾟｽﾄﾝ ﾘﾝｸﾞ (Std) Piston Ring (Std)	4	4		
	346-00014-0	ﾋﾟｽﾄﾝ ﾘﾝｸﾞ (0.5mm O/S) Piston Ring (0.5mm O/S)	4	4		Option
2-9	345-00042-0	ﾆｰﾄﾞﾙﾍﾞｱﾘﾝｸﾞ、17-21-27 Needle Bearing, 17-21-27	2	2		
2-10	3C8-00021-0	ﾋﾟｽﾄﾝﾋﾟﾝ Piston Pin	2	2		
2-11	334-00024-1	ﾋﾟｽﾄﾝﾋﾟﾝｸﾘｯﾌﾟ Piston Pin Clip	4	4		
2-12	334-00131-0	ﾏｸﾞﾈﾄｷｰ Magneto Key	1	1		

インレット・リードバルブ
Fig. 3 INLET・REED VALVE

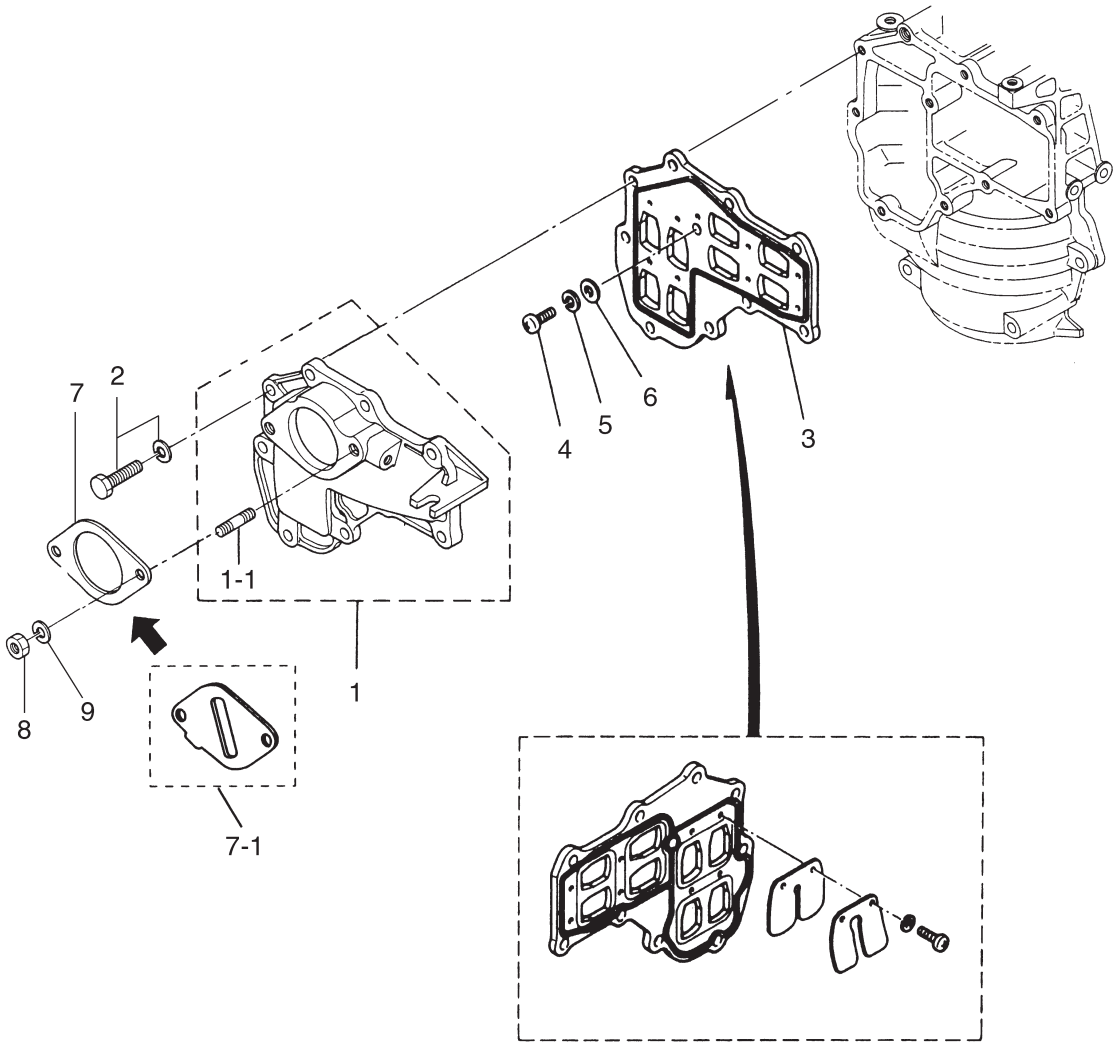

見出番号 Ref. No.	部品番号 Part No.	部　品　名 Description	個数 Q'ty 30 A4	 25 C3		備　考 Remarks
3-1	346B02010-1	ｲﾝﾃｰｸﾏﾆﾎｰﾙﾄﾞ Intake Manifold	1	1		30A4 # 35175～ 25C3 # 50039～
3-1-1	915321-0618	ｽﾀｯﾄﾞﾎﾞﾙﾄ ＊ Stud Bolt	2	2		
3-2	910121-6625	ﾎﾞﾙﾄ Bolt	9	9		
3-3	346-02100-2	ﾘｰﾄﾞﾊﾞﾙﾌﾞｱｯｼ Reed Valve Ass'y	1	1		
3-4	921521-0616	ｽｸﾘｭ Screw	1	1		
3-5	941322-0600	ｽﾌﾟﾘﾝｸﾞﾜｯｼｬ Spring Washer	1	1		
3-6	940121-0600	ﾜｯｼｬ Washer	1	1		
3-7	346-02011-0	ｷｬﾌﾞﾚﾀｶﾞｽｹｯﾄ Carburetor Gasket	1	-		
3-7-1	3P1-03536-0	ﾘｽﾄﾘｸｼｮﾝﾌﾟﾚｰﾄ Restriction Plate	-	1		25C3 # 50039～
3-8	930103-0600	ﾅｯﾄ Nut	2	2		or 930113-0600
3-9	941303-0600	ｽﾌﾟﾘﾝｸﾞﾜｯｼｬ Spring Washer	2	2		

キャブレタ
Fig. 4 CARBURETOR

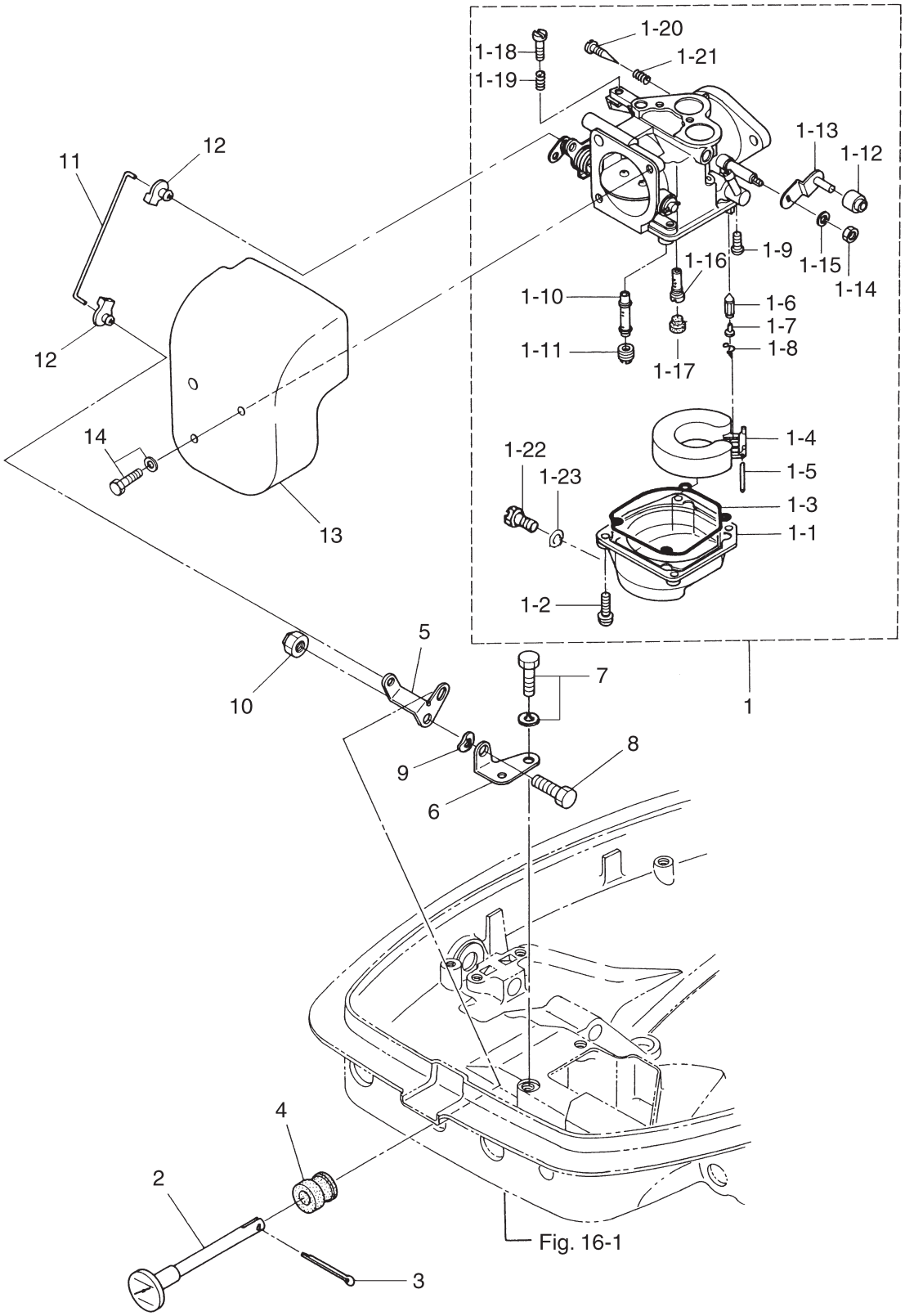

見出番号 Ref. No.	部品番号 Part No.	部　品　名 Description	個数 Q'ty 30 A4	 25 C3		備　考 Remarks
4-1	3P0-03200-0	ｷｬﾌﾞﾚﾀ B03E Carburetor B03E	1	1		30A4 # 35175～ 25C3 # 50039～
4-1-1	353-03221-0	ﾌﾛｰﾄﾁｬﾝﾊﾞ * Float Chamber	1	1		
4-1-2	922503-6414	ｽｸﾘｭ * Screw	4	4		
4-1-3	346-03222-0	ﾌﾛｰﾄﾁｬﾝﾊﾞ O ﾘﾝｸﾞ * Float Chamber O-Ring	1	1		
4-1-4	346-03231-0	ﾌﾛｰﾄ * Float	1	1		
4-1-5	346-03232-0	ﾌﾛｰﾄｱｰﾑﾋﾟﾝ * Float Arm Pin	1	1		
4-1-6	3B7-03240-0	ﾌﾛｰﾄﾊﾞﾙﾌﾞ * Float Valve	1	1		
4-1-7	334-03242-0	ﾊﾞﾙﾌﾞﾋﾟﾝ * Valve Pin	1	1		
4-1-8	344-03244-0	ｸﾘｯﾌﾟ * Clip	1	1		
4-1-9	3F3-03234-0	ｽｸﾘｭ * Screw	1	1		
4-1-10	3A1-03252-0	ﾒｲﾝﾉｽﾞﾙ # 100 * Main Nozzle # 100	1	1		30A3 # 21031～ 25C2 # 27906～
4-1-11	3A1-03251-0	ﾒｲﾝｼﾞｪｯﾄ # 155 * Main Jet # 155	1	1		
4-1-12	346-03264-0	ｶﾗｰ * Collar	1	1		
4-1-13	346-03272-0	ｽﾛｯﾄﾙﾚﾊﾞｰ * Throttle Lever	1	1		
4-1-14	930131-0500	ﾅｯﾄ * Nut	1	1		
4-1-15	941332-0500	ｽﾌﾟﾘﾝｸﾞﾜｯｼｬ * Spring Washer	1	1		
4-1-16	3A1-03276-0	ｽﾛｰｼﾞｪｯﾄ # 85 * Slow Jet # 85	1	1		30A3 # 21031～ 25C2 # 27906～
4-1-17	346-03256-0	ﾗﾊﾞｰｷｬｯﾌﾟ * Rubber Cap	1	1		
4-1-18	346-03265-0	ｽﾄｯﾌﾟｽｸﾘｭ * Stop Screw	1	1		
4-1-19	346-03267-0	ｽﾌﾟﾘﾝｸﾞ A * Spring "A"	1	1		
4-1-20	346-03266-0	ｱｼﾞｬｽﾄｽｸﾘｭ * Adjusting Screw	1	1		
4-1-21	346-03268-0	ｽﾌﾟﾘﾝｸﾞ B * Spring "B"	1	1		
4-1-22	345-03292-0	ﾄﾞﾚﾝｽｸﾘｭ * Drain Screw	1	1		
4-1-23	336-03293-0	ﾄﾞﾚﾝｽｸﾘｭ O ﾘﾝｸﾞ * Drain Screw O-Ring	1	1		
4-2	346-67151-1	ﾁｮｰｸﾛｯﾄﾞ Choke Rod	1	1		
4-3	951503-0212	ｽﾌﾟﾘｯﾄﾋﾟﾝ、2-12 Split Pin, 2-12	1	1		
4-4	346-67104-0	ﾁｮｰｸﾛｯﾄﾞﾌﾞｯｼﾝｸﾞ Choke Rod Bushing	1	1		
4-5	346-67152-0	ﾁｮｰｸﾚﾊﾞｰ Choke Lever	1	1		
4-6	346-67153-0	ﾁｮｰｸﾚﾊﾞｰﾌﾞﾗｹｯﾄ Choke Lever Bracket	1	1		
4-7	910103-6612	ﾎﾞﾙﾄ Bolt	2	2		

キャブレタ
Fig. 4 CARBURETOR

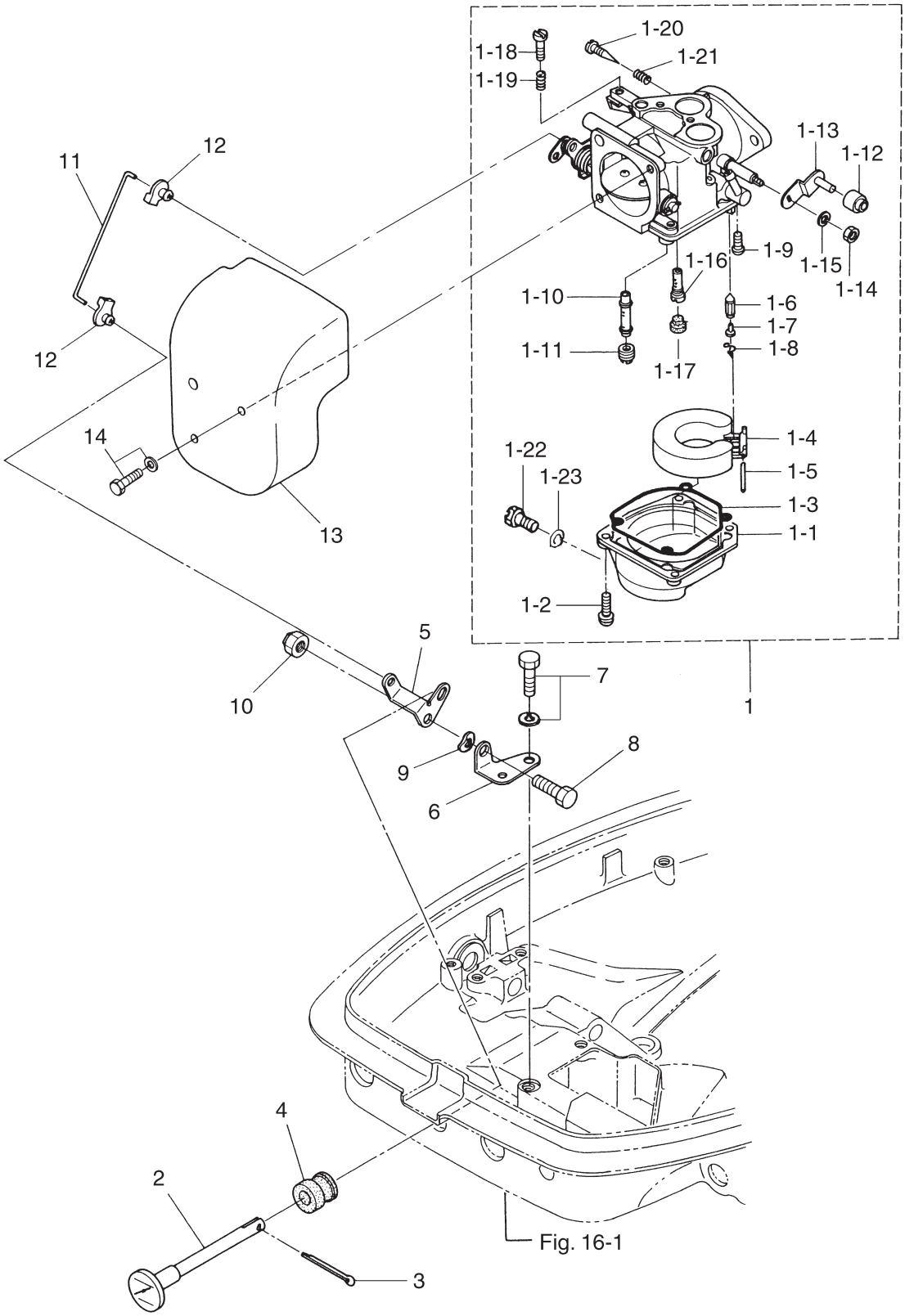

見出番号 Ref. No.	部品番号 Part No.	部　品　名 Description	個数 Q'ty 30 A4	 25 C3		備　考 Remarks
4-8	910103-0614	ﾎﾞﾙﾄ Bolt	1	1		
4-9	941403-0600	ｳｪｰﾌﾞﾜｯｼｬ、d=6 Wave Washer, d=6	1	1		
4-10	930403-0600	ﾅｲﾛﾝﾅｯﾄ、6P-1.0 Nylon Nut, 6P-1.0	1	1		
4-11	346-67191-1	ﾁｮｰｸﾘﾝｸﾛｯﾄﾞ Choke Link Rod	1	1		
4-12	346-67196-1	ﾛｯﾄﾞｽﾅｯﾌﾟ、φ3-B Rod Snap, φ3-B	2	2		
4-13	346-02411-1	ｲﾝﾃｰｸｻｲﾚﾝｻ Intake Silencer	1	1		30A4 # 35175～ 25C3 # 50039～
4-14	910121-5614	ﾎﾞﾙﾄ Bolt	2	2		

フュエルポンプ
Fig. 5 FUEL PUMP

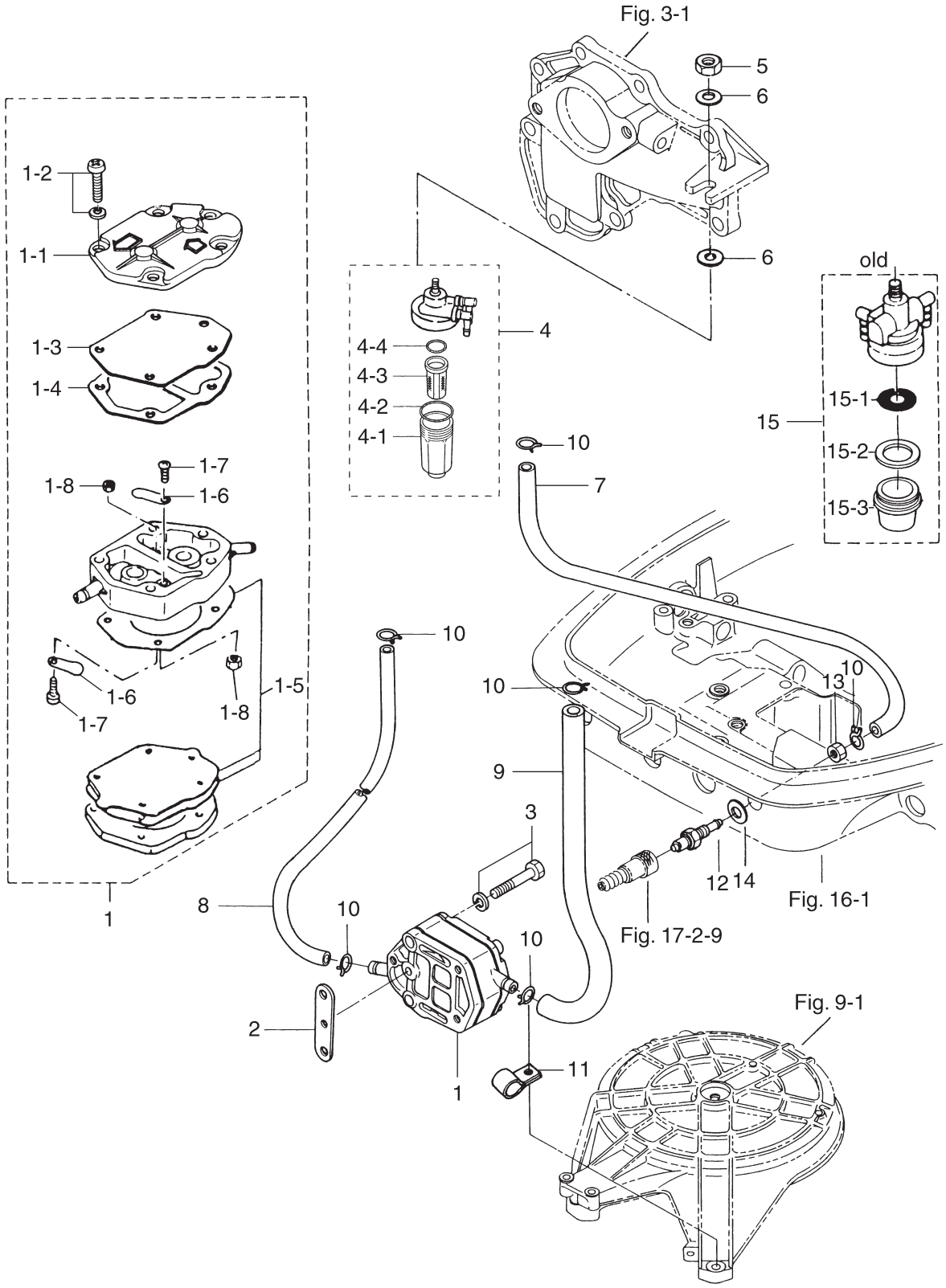

見出番号 Ref. No.	部品番号 Part No.	部　品　名 Description	個数 Q'ty 30 A4	 25 C3		備　考 Remarks
5-1	356-04000-1	ﾌｭｴﾙﾎﾟﾝﾌﾟ Fuel Pump	1	1		
5-1-1	334-04004-0	ﾎﾟﾝﾌﾟｶﾊﾞｰ ＊ Pump Cover	1	1		
5-1-2	922512-6528	ｽｸﾘｭ ＊ Screw	3	3		
5-1-3	334-04005-0	ﾎﾟﾝﾌﾟﾀﾞｲｱﾌﾗﾑ ＊ Pump Diaphragm	1	1		
5-1-4	334-04007-0	ﾀﾞｲｱﾌﾗﾑｶﾞｽｹｯﾄ B ＊ Diaphragm Gasket “B”	1	1		
5-1-5	356-04030-0	ﾀﾞｲｱﾌﾗﾑｶﾞｽｹｯﾄｾｯﾄ ＊ Diaphragm Gasket Set	1	1		
5-1-6	356-04044-0	ﾁｪｯｸﾊﾞﾙﾌﾞ ＊ Check Valve	2	2		
5-1-7	921722-0306	ｽｸﾘｭ ＊ Screw	2	2		
5-1-8	930222-0300	ﾅｯﾄ ＊ Nut	2	2		
5-2	346-04901-0	ﾌｭｴﾙﾎﾟﾝﾌﾟｶﾞｽｹｯﾄ Fuel Pump Gasket	1	1		
5-3	921503-6640	ｽｸﾘｭ Screw	2	2		
5-4	3B7-02230-0	ﾌｭｴﾙﾌｨﾙﾀ Fuel Filter	1	1		
5-4-1	3B7-02237-0	ｶｯﾌﾟ ＊ Cup	1	1		
5-4-2	3B7-02235-0	O ﾘﾝｸﾞ A ＊ O-Ring “A”	1	1		New # 014961XC～
5-4-3	3B7-02234-0	ﾌｨﾙﾀ ＊ Filter	1	1		
5-4-4	3B7-02236-0	O ﾘﾝｸﾞ B ＊ O-Ring “B”	1	1		
5-5	930103-0800	ﾅｯﾄ Nut	1	1		or 930113-0800
5-6	3P0-66233-0	ﾜｯｼｬ、8.1-16-1.5 Washer, 8.1-16-1.5	2	2		
5-7	98AB-5-0140	ﾌｭｴﾙﾎｰｽ Fuel Hose	1	1		
5-8	98AB-5-0160	ﾌｭｴﾙﾎｰｽ Fuel Hose	1	1		
5-9	98AB-5-0230	ﾌｭｴﾙﾎｰｽ Fuel Hose	1	1		
5-10	338-02215-0	ｸﾘｯﾌﾟ、φ10 Clip, φ10	6	6		
5-11	345-06915-0	ｸﾗﾝﾌﾟ、6.5-14L Clamp, 6.5-14L	1	1		
5-12	3B2-70260-1	ﾌｭｴﾙｺﾈｸﾀ (ｴﾝｼﾞﾝ、ﾒｰﾙ) Fuel Connector (Engine, Male)	1	1		
5-13	332-70261-0	ﾅｯﾄ、10-P1.25 Nut, 10-P1.25	1	1		
5-14	336-70112-0	ｶﾞｽｹｯﾄ、10.2-16-0.5 Gasket, 10.2-16-0.5	1	1		
5-15	346-02230-0	ﾌｭｴﾙﾌｨﾙﾀ Fuel Filter	1	1		
5-15-1	346-02234-0	ﾌｨﾙﾀ ＊ Filter	1	1		Old ～# 010808XC
5-15-2	346-02235-0	ｶﾞｽｹｯﾄ ＊ Gasket	1	1		
5-15-3	346-02237-0	ｶｯﾌﾟ ＊ Cup	1	1		

マグネト　　25C3 #50039 ～
Fig. 6　MAGNETO　30A4 #35175 ～

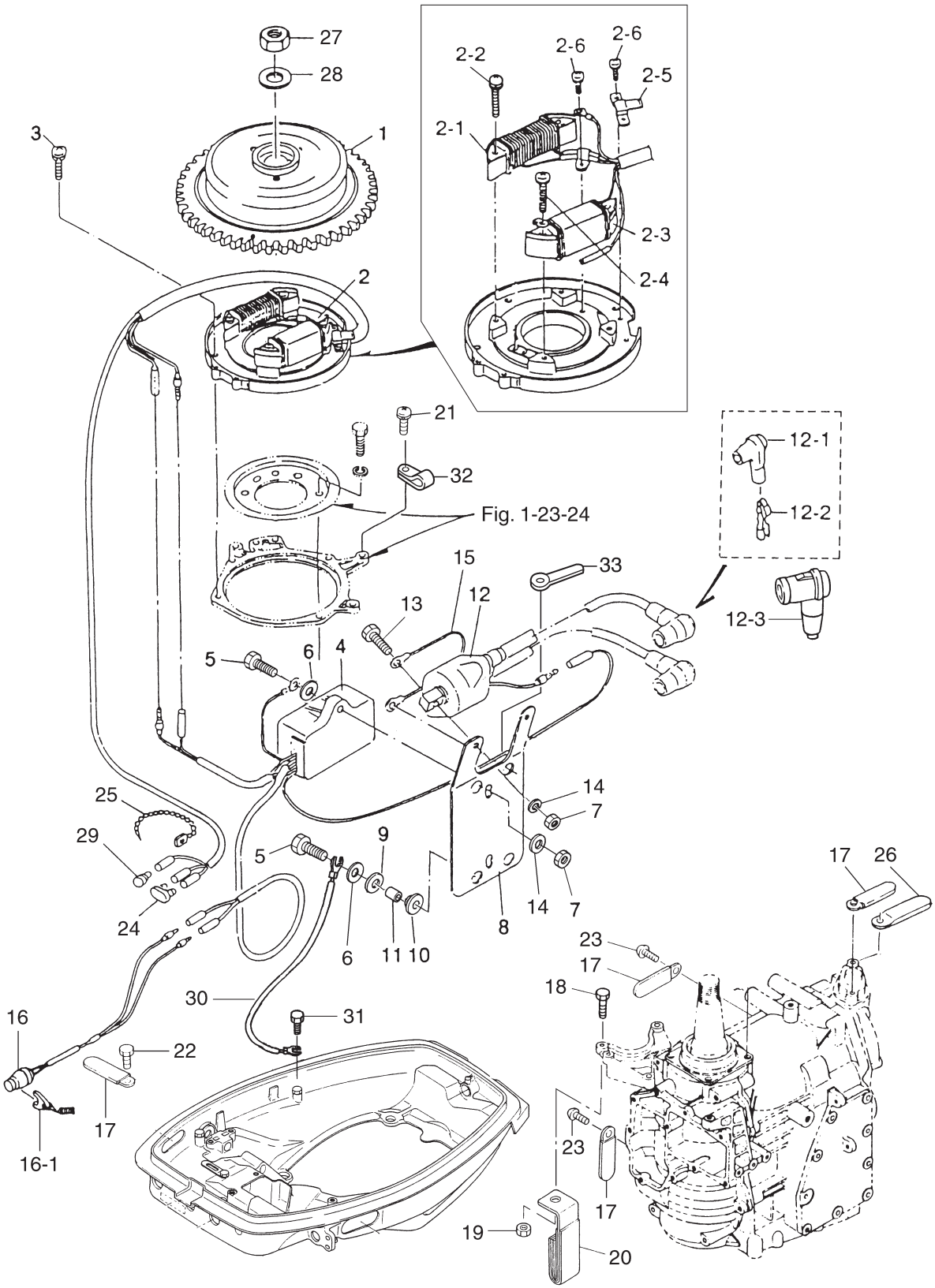

見出番号 Ref. No.	部品番号 Part No.	部　品　名 Description	個数 Q'ty 30 A4	 25 C3		備　考 Remarks
6-1	3P0-06091-1	ﾌﾗｲﾎｲﾙｶｯﾌﾟ Flywheel Cup	1	1		FP5531
6-2	3P0-06002-0	ｺｲﾙﾌﾟﾚｰﾄｱｯｼ Coil Plate Ass'y	1	1		
6-2-1	3P0-06023-0	＊ ｵﾙﾀﾈｰﾀ Alternator	1	1		
6-2-2	921521-6528	＊ ｽｸﾘｭ Screw	2	2		
6-2-3	3G3-06021-1	＊ ｴｷｻｲﾀｺｲﾙ Exciter Coil	1	1		
6-2-4	921521-6522	＊ ｽｸﾘｭ Screw	2	2		
6-2-5	350-06025-0	＊ ﾏｸﾞﾈﾄｺｰﾄﾞﾎﾙﾀﾞ Magneto Cord Holder	1	1		
6-2-6	921521-6406	＊ ｽｸﾘｭ Screw	3	3		
6-3	921521-6510	ｽｸﾘｭ Screw	4	4		
6-4	3P0-06060-0	C. D. ﾕﾆｯﾄ C.D. Unit	1	1		CU 2561
6-5	910103-6625	ﾎﾞﾙﾄ Bolt	4	4		
6-6	3C8-66308-0	ﾜｯｼｬ、6-16-1.5 Washer, 6-16-1.5	5	5		
6-7	930103-0600	ﾅｯﾄ Nut	3	3		
6-8	3A0-06322-1	ｴﾚｸﾄﾘｯｸﾌﾟﾚｰﾄ Electric Plate	1	1		
6-9	3B7-06305-0	ﾗﾊﾞｰﾏｳﾝﾄ、9-16-4.3 Rubber Mount, 9-16-4.3	3	3		
6-10	3F3-06920-0	ﾗﾊﾞｰﾏｳﾝﾄ、8.5-12-2 Rubber Mount, 8.5-12-2	3	3		
6-11	3A0-76079-0	ｶﾗｰ、6.2-9-7.5 Collar, 6.2-9-7.5	3	3		
6-12	3A0-06040-1	ｲｸﾞﾆｯｼｮﾝｺｲﾙ (ﾚｼﾞｽﾀﾝｽｷｬｯﾌﾟ付) Ignition Coil (with Resistance Cap)	1	1		IG 3757
6-12-1	3M2-06921-0	＊ ﾌﾟﾗｸﾞｷｬｯﾌﾟ Plug Cap	2	2		
6-12-2	3M2-06926-0	＊ ﾌﾟﾗｸﾞｷｬｯﾌﾟﾀｰﾐﾅﾙ Plug Cap Terminal	2	2		
6-12-3	3C7-06921-0	＊ ﾌﾟﾗｸﾞｷｬｯﾌﾟ (ﾚｼﾞｽﾀﾝｽ) Plug Cap (with Resistance)	2	2		
6-13	910103-5620	ﾎﾞﾙﾄ Bolt	2	2		
6-14	941303-0600	ｽﾌﾟﾘﾝｸﾞﾜｯｼｬ Spring Washer	2	2		
6-15	3B7-76142-0	ｱｰｽｺｰﾄﾞ Ground Cable	1	1		L=120
6-16	398-06830-0	ｽﾄｯﾌﾟｽｲｯﾁ Stop Switch	1	1		
6-16-1	353-06821-0	＊ ｽﾄｯﾌﾟｽｲｯﾁﾛｯｸ (ﾛｰﾌﾟ付) Stop Switch Lanyard	1	1		
6-17	309-06972-0	ｸﾗﾝﾌﾟ、6.5-47.5P Clamp, 6.5-47.5P	4	4		
6-18	910114-0825	ﾎﾞﾙﾄ Bolt	1	1		
6-19	930103-0800	ﾅｯﾄ Nut	1	1		
6-20	345-06917-1	ｸﾗﾝﾌﾟ、9-20U Clamp, 9-20U	1	1		

マグネト　　25C3 #50039 ～
Fig. 6　MAGNETO　30A4 #35175 ～

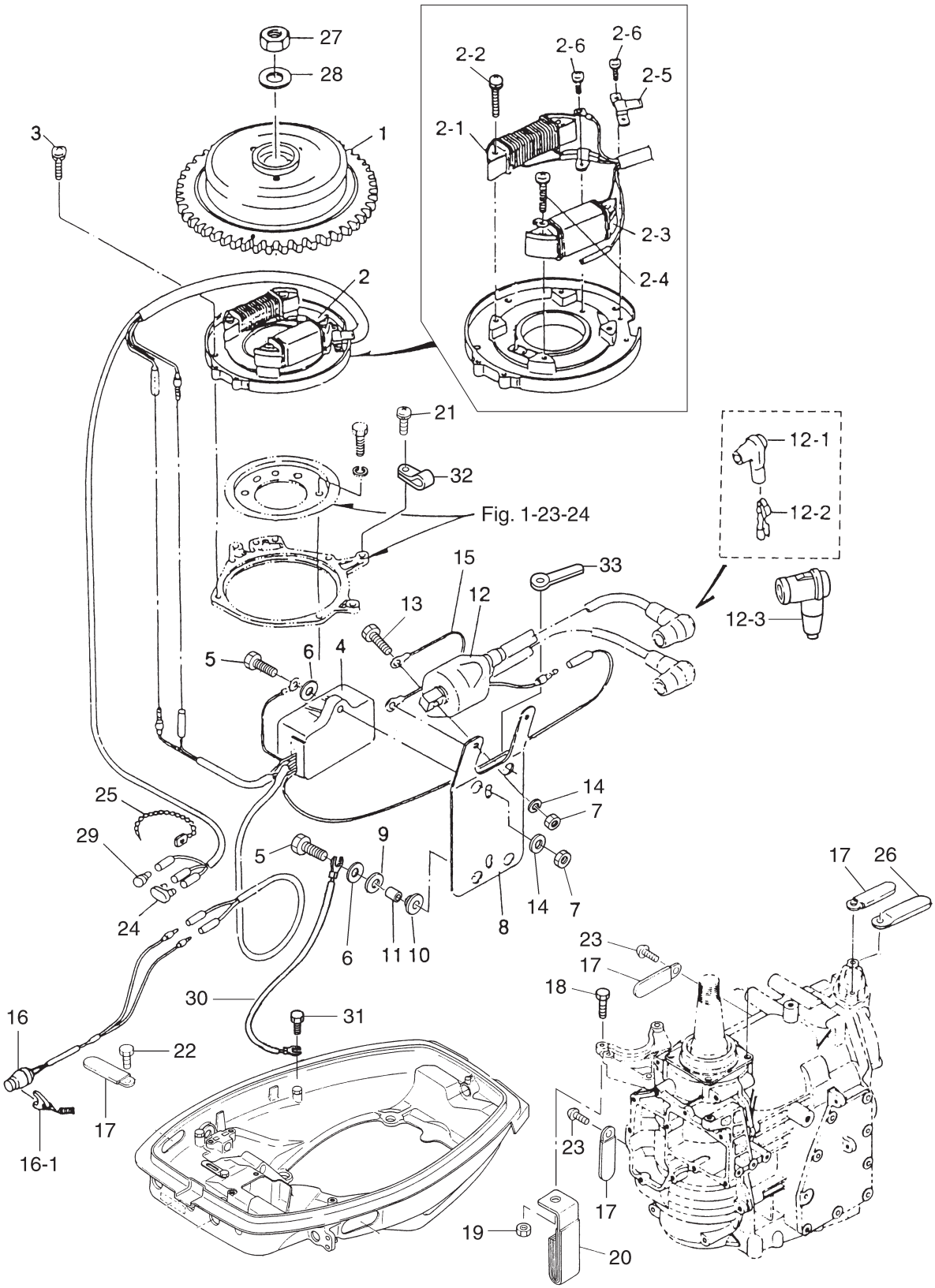

見出番号 Ref. No.	部品番号 Part No.	部　品　名 Description	個数 Q'ty 30 A4	 25 C3		備　考 Remarks
6-21	922503-6510	ｽｸﾘｭ Screw	1	1		
6-22	910121-0612	ﾎﾞﾙﾄ Bolt	1	1		
6-23	921521-0610	ｽｸﾘｭ Screw	2	2		
6-24	353-76037-0	ｹｰﾌﾞﾙﾀｰﾐﾅﾙﾌﾟﾗｸﾞ Cable Terminal Plug	1	1		
6-25	336-76091-0	ﾘｰﾄﾞﾜｲﾔﾊﾞﾝﾄﾞ Lead Wire Band	1	1		
6-26	398-06972-0	ｸﾗﾝﾌﾟ、6.5-67P Clamp, 6.5-67P	1	1		
6-27	931121-1600	ﾅｯﾄ、16P-1.5 (新) Nut, 16P-1.5 (New)	1	1		# 032359XD～ Clockwise
	334-00132-0	ﾅｯﾄ、16P-1.5L (旧) Nut, 16P-1.5L (Old)	(1)	(1)		～# 028071XD Counterclockwise
6-28	334-00133-0	ﾜｯｼｬ、17-30-1.6 Washer, 17-30-1.6	1	1		
6-29	3A3-76037-0	ｹｰﾌﾞﾙﾀｰﾐﾅﾙﾌﾟﾗｸﾞ Cable Terminal Plug	1	1		
6-30	3C7-76142-0	ｱｰｽﾜｲﾔ Ground Cable	1	1		L=170 for “MF” Type
6-31	910103-0612	ﾎﾞﾙﾄ Bolt	1	1		for “MF” Type
6-32	3P0-06915-0	ｸﾗﾝﾌﾟ、6.5-11L Clamp, 6.5-11L	1	1		
6-33	3T4-06972-0	ｸﾗﾝﾌﾟ、6.5-87P Clamp, 6.5-87P	1	1		

スロットルメカニズム
Fig. 7 THROTTLE MECHANISM

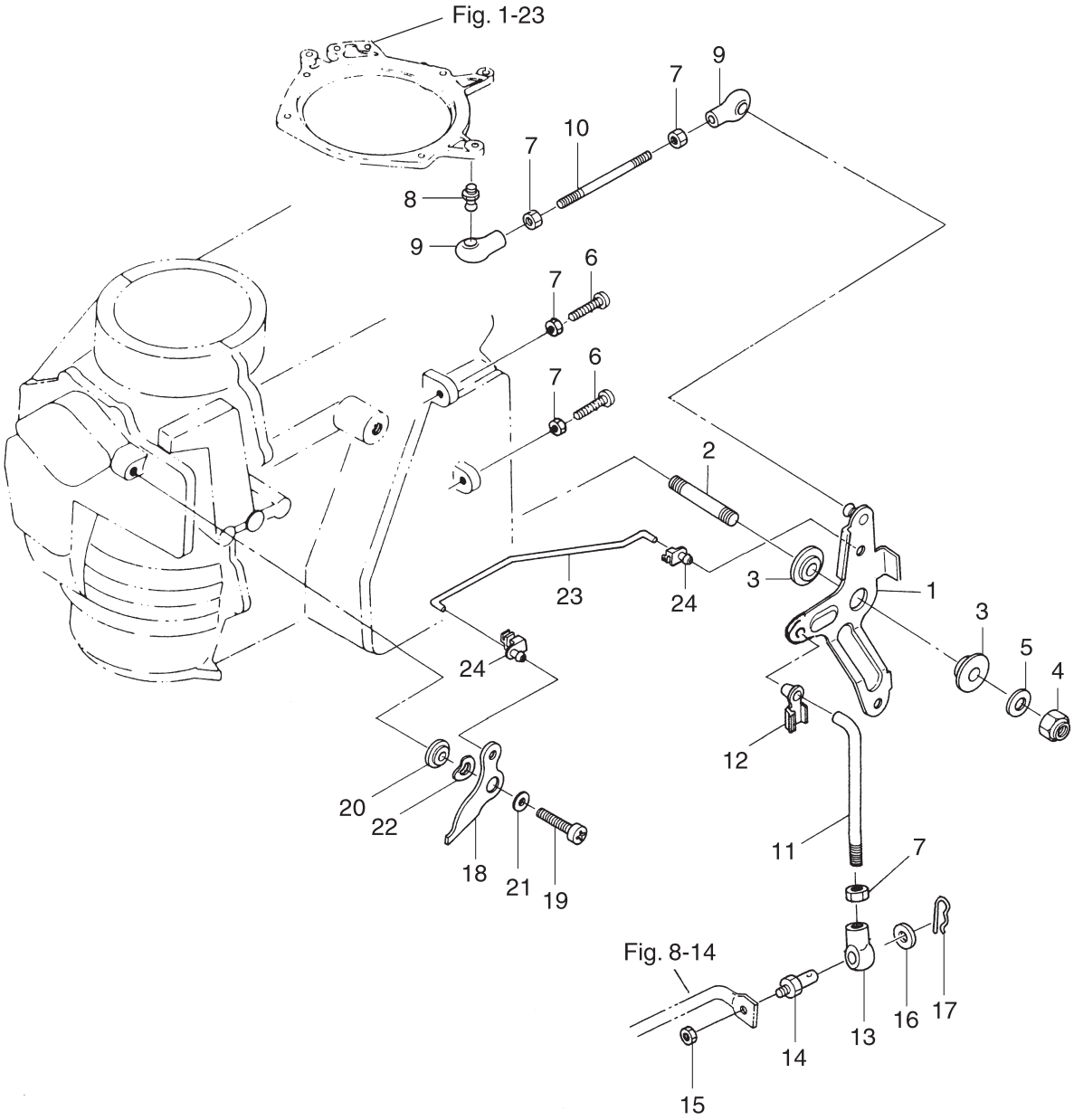

見出番号 Ref. No.	部品番号 Part No.	部　品　名 Description	個数 Q'ty 30 A4	 25 C3		備　考 Remarks
7-1	3P0-63711-0	ｱﾄﾞﾊﾞﾝｻｱｰﾑ Advancer Arm	1	1		30A4 # 35175～ 25C3 # 50039～
7-2	915221-0823	ｽﾀｯﾄﾞﾎﾞﾙﾄ Stud Bolt	1	1		
7-3	345-63713-0	ﾌﾞｯｼﾝｸﾞ、8-14-4 Bushing, 8-14-4	2	2		
7-4	930403-0800	ﾅｲﾛﾝﾅｯﾄ、8P-1.25 Nylon Nut, 8P-1.25	1	1		
7-5	3P0-66233-0	ﾜｯｼｬ、8.1-16-1.5 Washer, 8.1-16-1.5	1	1		or 334-66233-0
7-6	921503-0525	ｽｸﾘｭ Screw	2	2		
7-7	930103-0500	ﾅｯﾄ Nut	5	5		
7-8	346-05228-1	ﾎﾞｰﾙｼﾞｮｲﾝﾄ B Ball Joint B	1	1		
7-9	3B7-05243-0	ﾎﾞｰﾙｼﾞｮｲﾝﾄｺﾈｸﾀ C Ball Joint Connector “C”	2	2		
7-10	350-63717-1	ﾘﾝｸﾛｯﾄﾞ、5-50L Link Rod, 5-50L	1	1		30A4 # 35175～ 25C3 # 50039～
7-11	348-63715-1	ﾘﾝｸﾛｯﾄﾞ、5-75L Link Rod, 5-75L	1	1		
7-12	3B7-63733-0	ﾛｯﾄﾞｽﾅｯﾌﾟ、5-3 Rod Snap, 5-3	1	1		
7-13	346-05234-0	φ5 ﾛｯﾄﾞｼﾞｮｲﾝﾄ φ5 Rod Joint	1	1		
7-14	353-83728-1	ｹｰﾌﾞﾙﾋﾟﾝ Cable Pin	1	1		
7-15	930103-0600	ﾅｯﾄ Nut	1	1		
7-16	3AA-83719-0	ﾜｯｼｬ、8.5-18-1.6 Washer, 8.5-18-1.6	1	1		or 353-83719-0
7-17	951603-0800	ｽﾅｯﾌﾟﾋﾟﾝ、d=8 Snap Pin, d=8	1	1		
7-18	3P0-63718-0	ｽﾛｯﾄﾙｶﾑ Throttle Cam	1	1		30A4 # 35175～ 25C3 # 50039～
7-19	921503-0616	ｽｸﾘｭ Screw	1	1		
7-20	346-63721-0	ﾌﾞｯｼﾝｸﾞ、6.2-16-5 Bushing, 6.2-16-5	1	1		
7-21	3R0-66308-0	ﾜｯｼｬ、6-16-1.5 Washer, 6-16-1.5	1	1		or 3C8-66308-0
7-22	941403-1000	ｳｴｰﾌﾞﾜｯｼｬ、d=10 Wave Washer, d=10	1	1		
7-23	346-63716-1	ｽﾛｯﾄﾙﾘﾝｸﾛｯﾄﾞ Throttle Link Rod	1	1		
7-24	345-05223-1	ﾛｯﾄﾞｽﾅｯﾌﾟ、3.5-2 Rod Snap, 3.5-2	2	2		

バーハンドル
Fig. 8 TILLER HANDLE

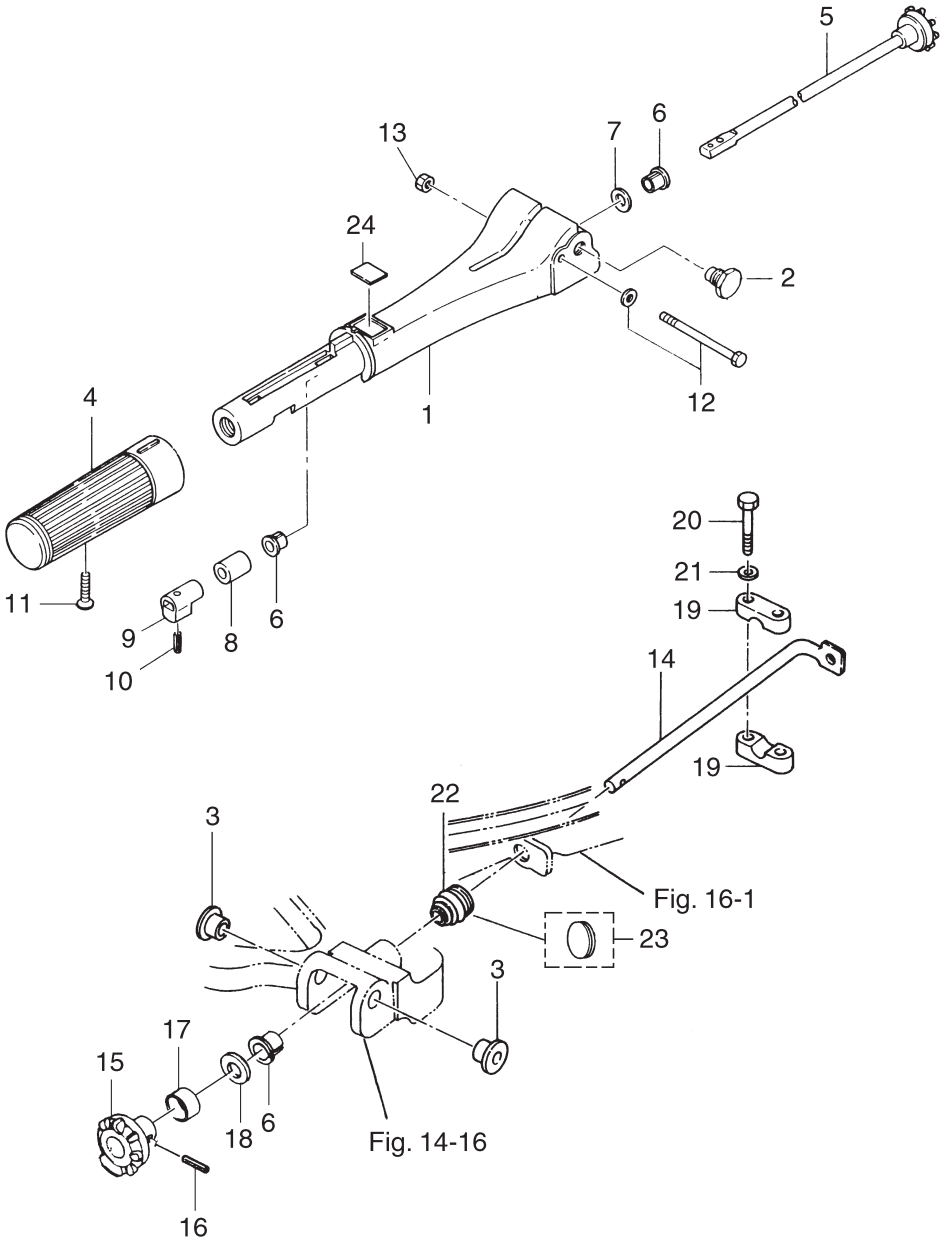

見出番号 Ref. No.	部品番号 Part No.	部　品　名 Description	個数 Q'ty 30 A4	 25 C3		備　考 Remarks
8-1	398Q63011-0	ﾃｨﾗﾊﾝﾄﾞﾙ Tiller Handle	1	1		
8-2	346-63201-1	ﾃｨﾗﾊﾝﾄﾞﾙﾎﾞﾙﾄ Tiller Handle Bolt	2	2		
8-3	345-63207-0	ｶﾗｰ、9.8-12-7.5 Collar, 9.8-12-7.5	2	2		
8-4	398-63012-0	ｸﾞﾘｯﾌﾟ Grip	1	1		
8-5	398-63041-0	ｽﾛｯﾄﾙｼｬﾌﾄ A Throttle Shaft “A”	1	1		
8-6	350-63046-0	ﾌﾞｯｼﾝｸﾞ、8.4-10-11 Bushing, 8.4-10-11	3	3		
8-7	941403-1000	ｳｴｰﾌﾞﾜｯｼｬ、d=10 Wave Washer, d=10	1	1		
8-8	345-63048-0	ｽﾛｯﾄﾙｼｬﾌﾄﾀﾞﾝﾊﾟ Throttle Shaft Damper	1	1		
8-9	398-63053-0	ｽﾛｯﾄﾙｼｬﾌﾄｽﾍﾟｰｻ Throttle Shaft Spacer	1	1		
8-10	951403-0310	ｽﾌﾟﾘﾝｸﾞﾋﾟﾝ、3-10 Spring Pin, 3-10	1	1		
8-11	921803-0525	ｽｸﾘｭ Screw	1	1		
8-12	910103-5675	ﾎﾞﾙﾄ Bolt	1	1		or 910113-5675
8-13	930403-0600	ﾅｲﾛﾝﾅｯﾄ、6P-1.0 Nylon Nut, 6P-1.0	1	1		
8-14	346-63061-2	ｽﾛｯﾄﾙｼｬﾌﾄ B Throttle Shaft “B”	1	1		
8-15	346-63064-0	ﾕﾆﾊﾞｰｻﾙﾋﾟﾆｵﾝ Universal Pinion	1	1		
8-16	951403-0414	ｽﾌﾟﾘﾝｸﾞﾋﾟﾝ、4-14 Spring Pin, 4-14	1	1		
8-17	346-63066-1	ｶﾗｰ、15.9-17.1-9 Collar, 15.9-17.1-9	1	1		
8-18	940103-0800	ﾜｯｼｬ Washer	1	1		or 940113-0800
8-19	345-63063-0	ｽﾛｯﾄﾙｼｬﾌﾄｻﾎﾟｰﾀ Throttle Shaft Supporter	2	2		
8-20	910114-0630	ﾎﾞﾙﾄ Bolt	2	2		
8-21	940103-0600	ﾜｯｼｬ Washer	2	2		or 940113-0600
8-22	345-66226-0	ｽﾛｯﾄﾙｼｬﾌﾄｸﾞﾛﾒｯﾄ Throttle Shaft Grommet	1	1		
8-23	345-67117-0	ｸﾞﾛﾒｯﾄ、17-2.7 Grommet, 17-2.7	1	1		for Remote Control
8-24	369-72019-1	ｽﾛｯﾄﾙﾃﾞｶﾙ Throttle Decal	1	1		

リコイルスタータ
Fig. 9 RECOIL STARTER

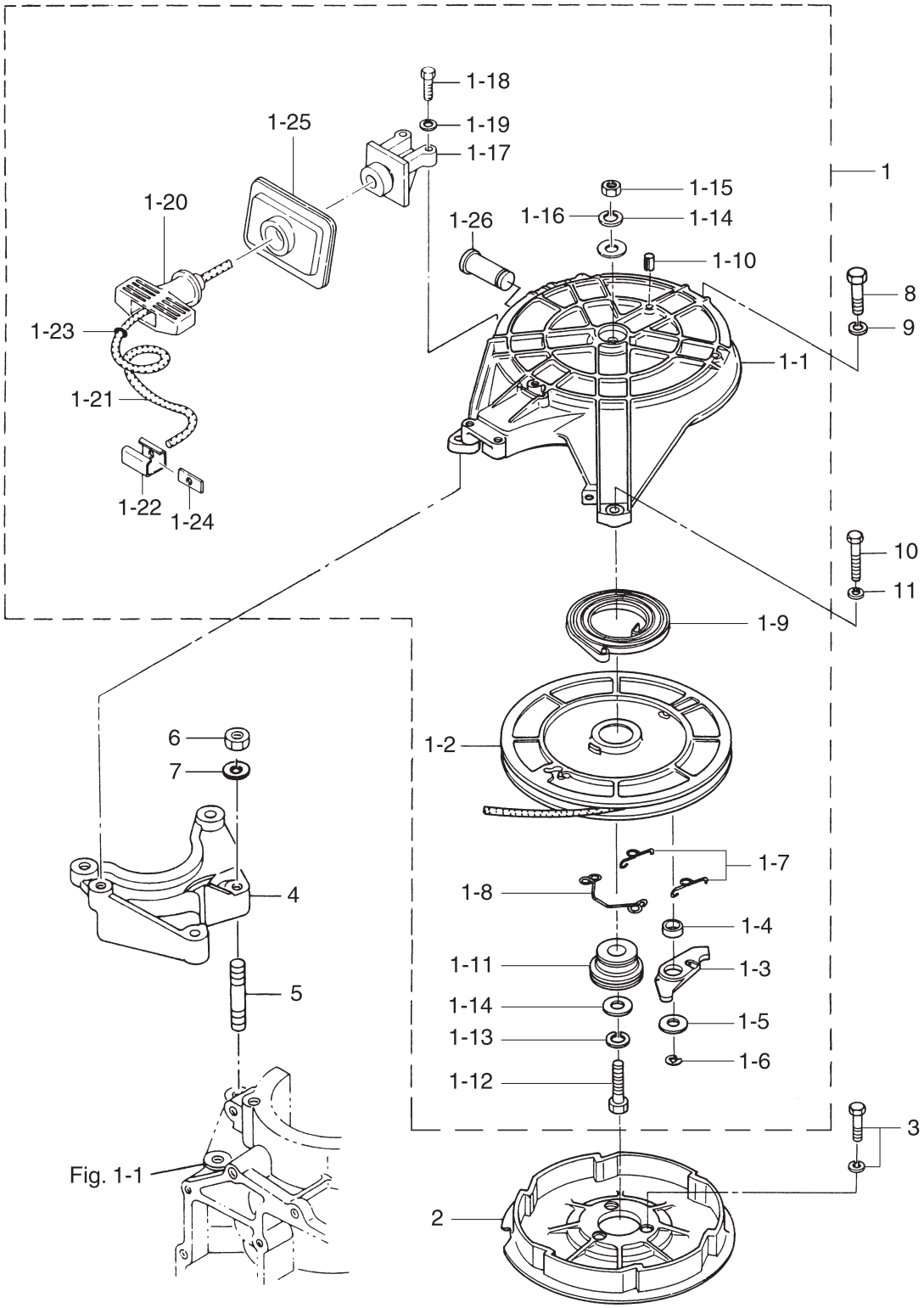

見出番号 Ref. No.	部品番号 Part No.	部　品　名 Description	個数 Q'ty 30 A4	 25 C3		備　考 Remarks
9-1	346-05000-2	ﾘｺｲﾙｽﾀｰﾀ Recoil Starter	1	1		
9-1-1	345-05105-1	ﾏｰﾀｹｰｽ ＊ Starter Case	1	1		
9-1-2	345-05104-1	ﾘｰﾙ ＊ Reel	1	1		
9-1-3	345-05003-1	ﾗﾁｪｯﾄ ＊ Ratchet	1	1		
9-1-4	345-05135-1	ﾗﾁｪｯﾄﾌﾞｯｼﾝｸﾞ ＊ Ratchet Bushing	1	1		
9-1-5	345-05122-0	ﾜｯｼｬ、6.5-23-1.5 ＊ Washer, 6.5-23-1.5	1	1		
9-1-6	945303-0500	E ﾘﾝｸﾞ、d=5 ＊ E-Ring, d=5	1	1		
9-1-7	345-05123-1	ﾘﾀｰﾝｽﾌﾟﾘﾝｸﾞ A ＊ Return Spring “A”	2	2		ﾗﾁｪｯﾄｶﾞｲﾄﾞ A Ratchet Guide “A”
9-1-8	345-05124-0	ﾘﾀｰﾝｽﾌﾟﾘﾝｸﾞ B ＊ Return Spring “B”	1	1		ﾗﾁｪｯﾄｶﾞｲﾄﾞ B Ratchet Guide “B”
9-1-9	345-05004-0	ｽﾀｰﾀｽﾌﾟﾘﾝｸﾞ ＊ Starter Spring	1	1		
9-1-10	951403-0316	ｽﾌﾟﾘﾝｸﾞﾋﾟﾝ、3-16 ＊ Spring Pin, 3-16	1	1		
9-1-11	345-05132-0	ｽﾀｰﾀｼｬﾌﾄ ＊ Starter Shaft	1	1		
9-1-12	910114-0830	ﾎﾞﾙﾄ ＊ Bolt	1	1		
9-1-13	941322-0800	ｽﾌﾟﾘﾝｸﾞﾜｯｼｬ ＊ Spring Washer	1	1		
9-1-14	940121-0800	ﾜｯｼｬ ＊ Washer	2	2		
9-1-15	930103-0800	ﾅｯﾄ ＊ Nut	1	1		or 910113-0800
9-1-16	941322-0800	ｽﾌﾟﾘﾝｸﾞﾜｯｼｬ ＊ Spring Washer	1	1		
9-1-17	336-05014-0	ｽﾀｰﾀﾛｰﾌﾟｶﾞｲﾄﾞ ＊ Starter Rope Guide	1	1		
9-1-18	910114-0625	ﾎﾞﾙﾄ ＊ Bolt	2	2		
9-1-19	941303-0600	ｽﾌﾟﾘﾝｸﾞﾜｯｼｬ ＊ Spring Washer	2	2		
9-1-20	338-05019-0	ｽﾀｰﾀﾊﾝﾄﾞﾙ ＊ Starter Handle	1	1		
9-1-21	345-05013-1	ｽﾀｰﾀﾛｰﾌﾟ ＊ Starter Rope	1	1		φ5-2000
9-1-22	338-05131-0	ﾛｰﾌﾟｱﾝｶ ＊ Rope Anchor	1	1		
9-1-23	350-05136-0	O ﾘﾝｸﾞ、2.5-4.5 ＊ O-Ring, 2.5-4.5	1	1		
9-1-24	345-05134-0	ﾛｰﾌﾟｱﾝｶﾌﾟﾚｰﾄ ＊ Rope Anchor Plate	1	1		
9-1-25	346-05116-1	ｽﾀｰﾀｼｰﾙﾌﾟﾚｰﾄ ＊ Starter Sealing Plate	1	1		
9-1-26	345-05225-0	ｽﾀｰﾀﾛｯｸﾚﾊﾞｰｼｬﾌﾄ ＊ Starter Lock Lever Shaft	1	1		
9-2	345-05901-1	ｽﾀｰﾀﾌﾟｰﾘ Starter Pulley	1	1		
9-3	910121-6625	ﾎﾞﾙﾄ Bolt	3	3		
9-4	346B05101-1	ｽﾀｰﾀﾌﾞﾗｹｯﾄ Starter Bracket	1	1		

リコイルスタータ
Fig. 9 RECOIL STARTER

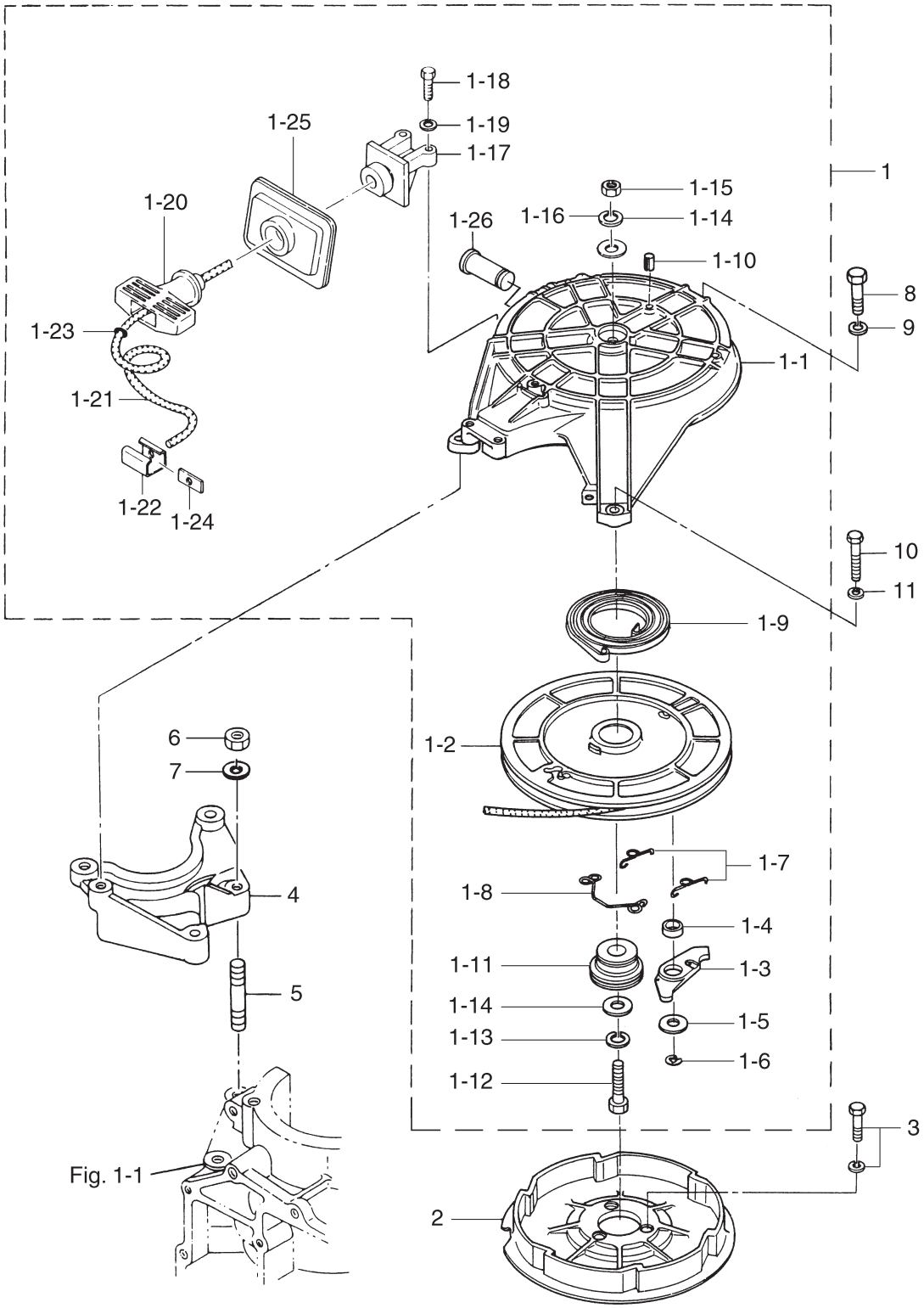

見出番号 Ref. No.	部品番号 Part No.	部　品　名 Description	個数 Q'ty 30 A4	 25 C3		備　考 Remarks
9-5	915314-0825	ｽﾀｯﾄﾞﾎﾞﾙﾄ Stud Bolt	2	2		
9-6	930121-0800	ﾅｯﾄ Nut	2	2		
9-7	940121-0800	ﾜｯｼｬ Washer	2	2		
9-8	910114-0830	ﾎﾞﾙﾄ Bolt	1	1		
9-9	941303-0800	ｽﾌﾟﾘﾝｸﾞﾜｯｼｬ Spring Washer	1	1		
9-10	910114-0625	ﾎﾞﾙﾄ Bolt	2	2		
9-11	941303-0600	ｽﾌﾟﾘﾝｸﾞﾜｯｼｬ Spring Washer	2	2		

スタータロック
Fig. 10 STARTER LOCK

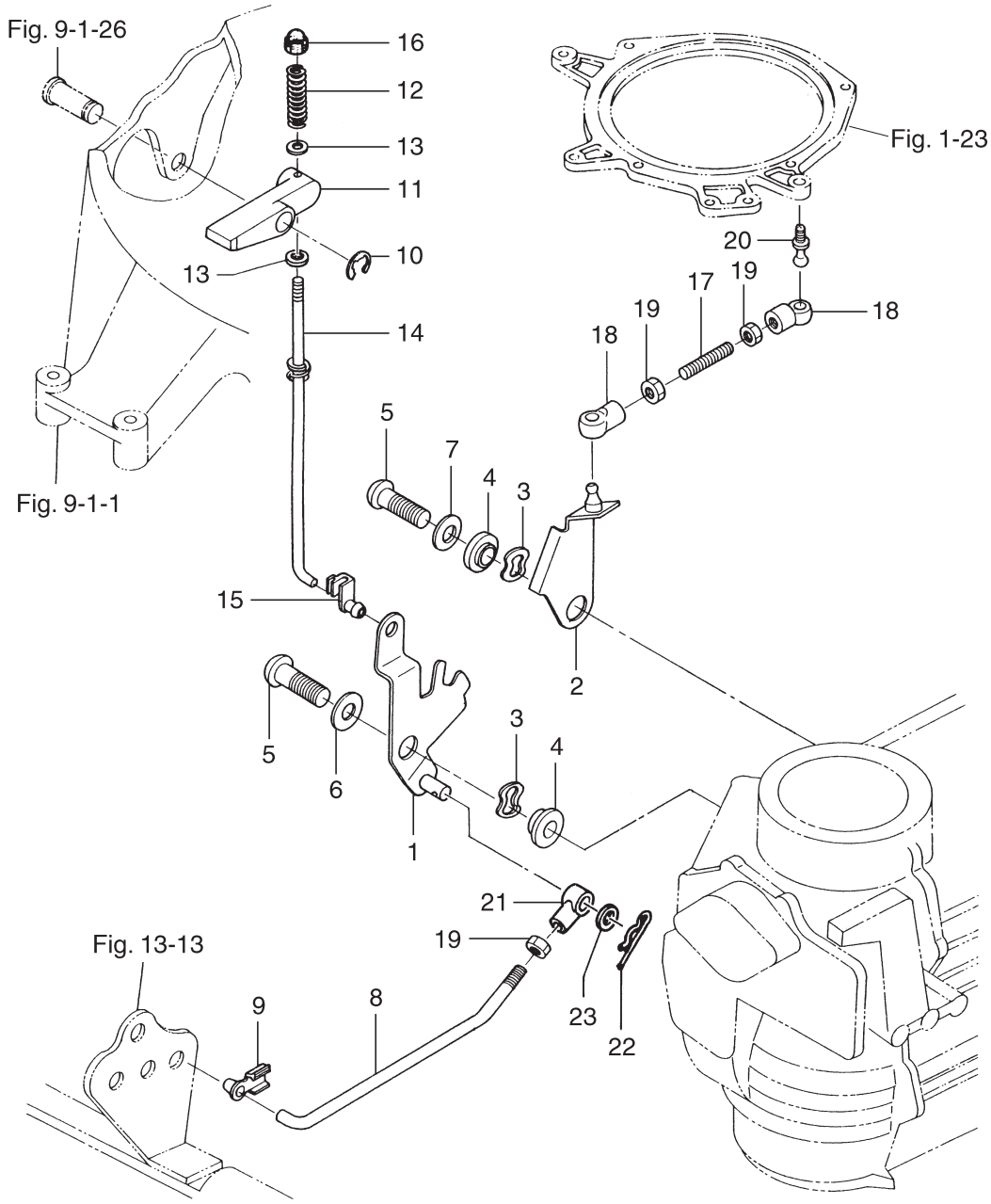

見出番号 Ref. No.	部品番号 Part No.	部　品　名 Description	個数 Q'ty 30 A4	 25 C3		備　考 Remarks
10-1	346-05211-1	ｽﾀｰﾀﾛｯｸｱｰﾑ Starter Lock Arm	1	1		
10-2	346-05213-0	ｽﾛｯﾄﾙﾘﾐｯﾀｱｰﾑ Throttle Limiter Arm	1	1		
10-3	941403-1000	ｳｪｰﾌﾞﾜｯｼｬ、d=10 Wave Washer, d=10	2	2		
10-4	346-05212-0	ﾌﾞｯｼﾝｸﾞ、6.2-16-7 Bushing, 6.2-16-7	2	2		
10-5	921503-0620	ｽｸﾘｭ Screw	2	2		
10-6	3R0-66308-0	ﾜｯｼｬ、6-16-1.5 Washer, 6-16-1.5	1	1		or 3C8-66308-0
10-7	940103-0600	ﾜｯｼｬ Washer	1	1		or 940113-0600
10-8	346-05222-0	ｽﾀｰﾀﾛｯｸｱｰﾑﾛｯﾄﾞ Starter Lock Arm Rod	1	1		
10-9	345-05224-0	ﾛｯﾄﾞｽﾅｯﾌﾟ、5-2.5 Rod Snap, 5-2.5	1	1		
10-10	945303-0600	E ﾘﾝｸﾞ、d=6 E-Ring, d=6	1	1		
10-11	345-05226-0	ｽﾀｰﾀﾛｯｸﾚﾊﾞｰ Starter Lock Lever	1	1		
10-12	345-05216-0	ｽﾀｰﾀﾛｯｸｽﾌﾟﾘﾝｸﾞ Starter Lock Spring	1	1		
10-13	940103-0400	ﾜｯｼｬ Washer	2	2		
10-14	346-05217-1	ｽﾀｰﾀﾛｯｸﾛｯﾄﾞ Starter Lock Rod	1	1		
10-15	345-05223-1	ﾛｯﾄﾞｽﾅｯﾌﾟ、3.5-2 Rod Snap, 3.5-2	1	1		
10-16	346-05209-0	ｷｬｯﾌﾟﾅｯﾄ Cap Nut	1	1		
10-17	346-05221-1	ｽﾛｯﾄﾙﾘﾐｯﾀﾛｯﾄﾞ Throttle Limiter Rod	1	1		
10-18	3B7-05243-0	ﾎﾞｰﾙｼﾞｮｲﾝﾄｺﾈｸﾀ C Ball Joint Connector “C”	2	2		
10-19	930103-0500	ﾅｯﾄ Nut	3	3		
10-20	346-05228-1	ﾎﾞｰﾙｼﾞｮｲﾝﾄ B Ball Joint “B”	1	1		
10-21	346-05234-0	φ5 ﾛｯﾄﾞｼﾞｮｲﾝﾄ φ5 Rod Joint	1	1		
10-22	951603-0800	ｽﾅｯﾌﾟﾋﾟﾝ、d=8 Snap Pin, d－8	1	1		
10-23	3AA-83719-0	ﾜｯｼｬ、8.5-18-1.6 Washer, 8.5-18-1.6	1	1		or 353-83719-0

ドライブシャフトハウジング・ギヤケース
Fig. 11 DRIVESHAFT HOUSING・GEAR CASE

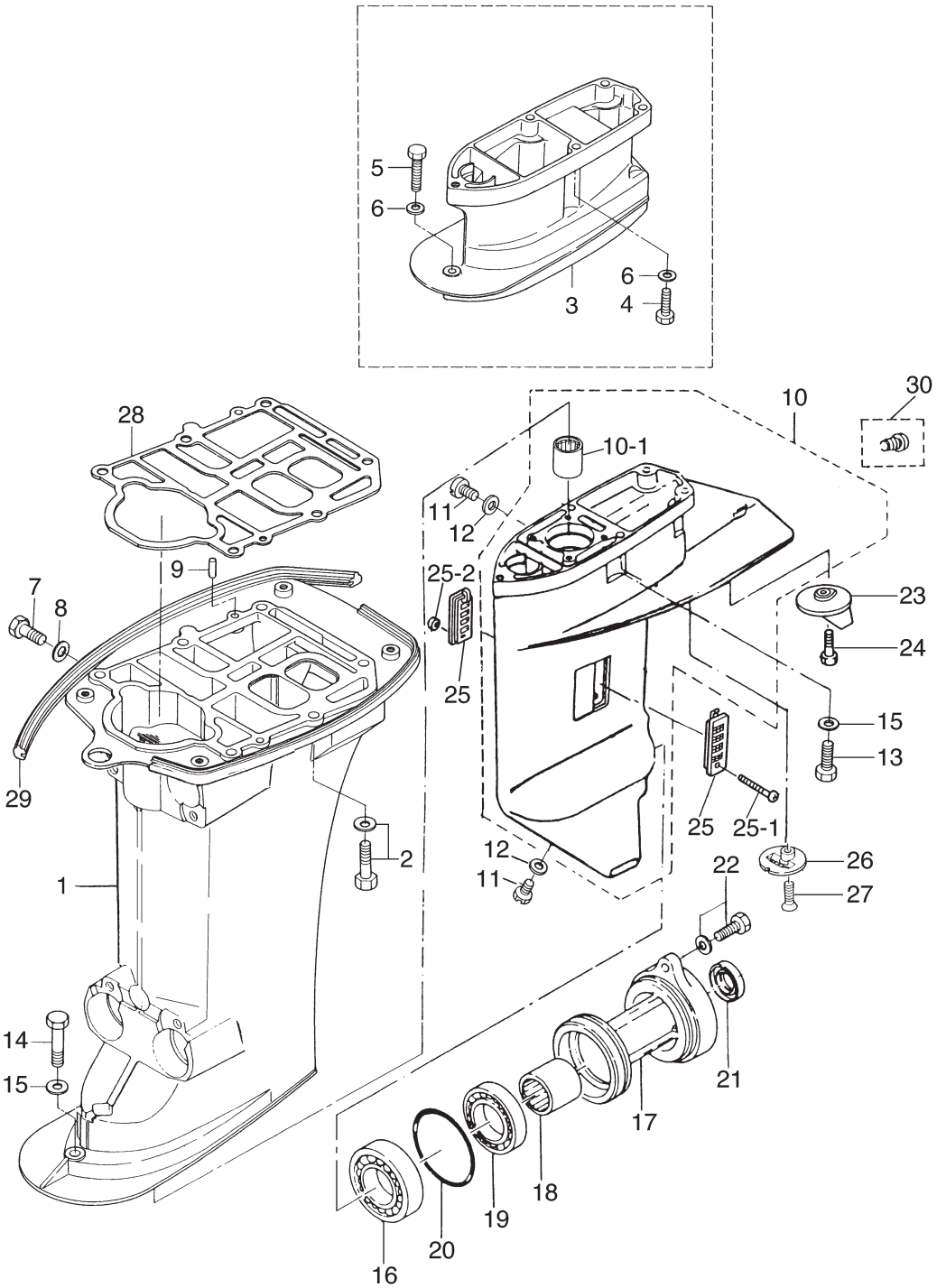

見出番号 Ref. No.	部品番号 Part No.	部　品　名 Description	個数 Q'ty 30 A4	 25 C3		備　考 Remarks
11-1	346Q61020-3	ﾄﾞﾗｲﾌﾞｼｬﾌﾄﾊｳｼﾞﾝｸﾞ S Drive Shaft Housing “S”	1	1		for Transom “S”
	346Q61030-3	ﾄﾞﾗｲﾌﾞｼｬﾌﾄﾊｳｼﾞﾝｸﾞ L Drive Shaft Housing “L”	1	1		for Transom “L”, “UL”
11-2	910113-5840	ﾎﾞﾙﾄ Bolt	6	6		
11-3	346Q61110-5	ｴｸｽﾃﾝｼｮﾝﾊｳｼﾞﾝｸﾞ UL Extension Housing “UL”	1	1		for Transom “UL”
11-4	916113-0835	ﾎﾞﾙﾄ Bolt	4	4		
11-5	916113-0845	ﾎﾞﾙﾄ Bolt	1	1		
11-6	3P0-66233-0	ﾜｯｼｬ、8.1-16-1.5 Washer, 8.1-16-1.5	5	5		
11-7	910613-0808	ｳｫｰﾀﾌﾟﾗｸﾞ Water Plug	1	1		
11-8	332-60006-0	ｶﾞｽｹｯﾄ、8.1-15-1 Gasket, 8.1-15-1	1	1		
11-9	345-01111-0	ﾀﾞｳｴﾙﾋﾟﾝ、6-12 Dowel Pin, 6-12	2	2		
11-10	346Q60000-6	ｷﾞﾔｹｰｽ Gear Case	1	1		(30A3 # 30720～Silver gray) (25C2 # 40911～Silver gray)
11-10-1	346-60211-0	ﾆｰﾄﾞﾙﾍﾞｱﾘﾝｸﾞ、20-27-30 ＊ Needle Bearing, 20-27-30	1	1		
11-11	332-60005-2	ｵｲﾙﾌﾟﾗｸﾞ Oil Plug	2	2		
11-12	332-60006-0	ｶﾞｽｹｯﾄ、8.1-15-1 Gasket, 8.1-15-1	2	2		
11-13	916113-0840	ｷﾞﾔｹｰｽﾎﾞﾙﾄ Gear Case Bolt	4	4		
11-14	916113-0840	ｷﾞﾔｹｰｽﾎﾞﾙﾄ Gear Case Bolt	1	1		for Transom “S”
	916113-0845	ｷﾞﾔｹｰｽﾎﾞﾙﾄ Gear Case Bolt	1	1		for Transom “L”, “UL”
11-15	3P0-66233-0	ﾜｯｼｬ、8.1-16-1.5 Washer, 8.1-16-1.5	5	5		
11-16	346-60215-0	ﾍﾞｱﾘﾝｸﾞ、30205 Bearing, 30205	1	1		
11-17	346Q60101-5	ﾌﾟﾛﾍﾟﾗｼｬﾌﾄﾊｳｼﾞﾝｸﾞ Propeller Shaft Housing	1	1		
11-18	346-60102-0	ﾆｰﾄﾞﾙﾍﾞｱﾘﾝｸﾞ、18-25-25 Needle Bearing, 18-25-25	1	1		
11-19	9601-0-6205	ﾎﾞｰﾙﾍﾞｱﾘﾝｸﾞ、6205 Ball Bearing, 6205	1	1		
11-20	332-60103-0	O ﾘﾝｸﾞ、3-62.5 O-Ring, 3-62.5	1	1		
11-21	346-60111-0	ｵｲﾙｼｰﾙ、18-28-8 Oil Seal, 18-28-8	1	1		
11-22	910113-5830	ﾎﾞﾙﾄ Bolt	2	2		
11-23	3C8-60217-1	ﾄﾘﾑﾀﾌﾞ Trim Tab	1	1		30A3 # 30720～ 25C2 # 40911～
11-24	910103-5620	ﾎﾞﾙﾄ Bolt	1	1		
11-25	3A1-60235-0	ｳｫｰﾀｽﾄﾚｰﾅｾｯﾄ Water Strainer Set	1	1		
11-25-1	921513-0430	ｽｸﾘｭ ＊ Screw	1	1		
11-25-2	930403-0400	ﾅｲﾛﾝﾅｯﾄ、4P-0.7 ＊ Nylon Nut, 4P-0.7	1	1		

ドライブシャフトハウジング・ギヤケース
Fig. 11 DRIVESHAFT HOUSING・GEAR CASE

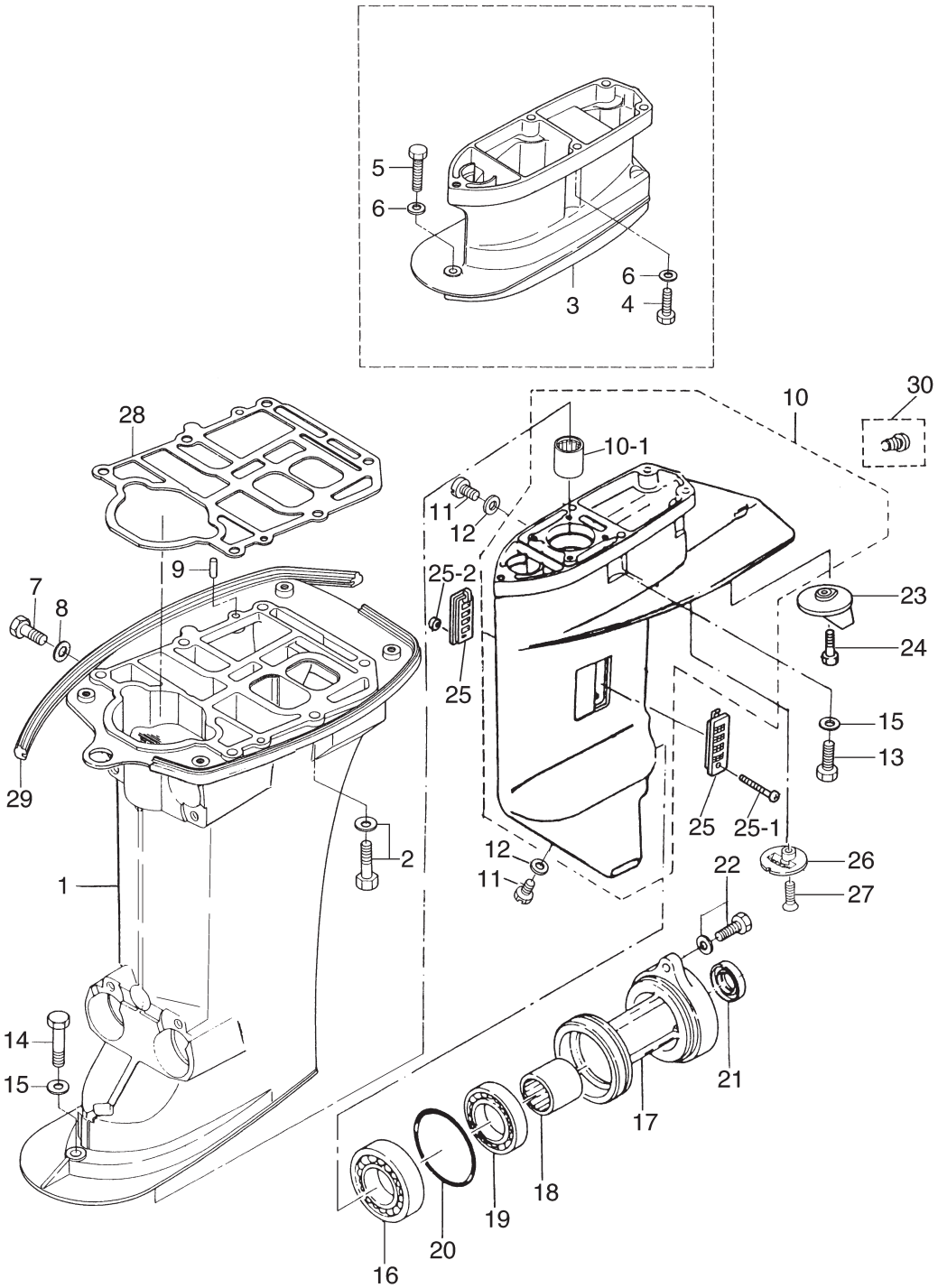

見出番号 Ref. No.	部品番号 Part No.	部　品　名 Description	個数 Q'ty 30 A4	 25 C3		備　考 Remarks
11-26	369-60206-0	ｻﾌﾞｳｫｰﾀｽﾄﾚｰﾅ Sub Water Strainer	1	1		
11-27	920813-0620	ｽｸﾘｭ Screw	1	1		or 921803-0620
11-28	346-01303-0	ｴﾝｼﾞﾝﾍﾞｰｽｶﾞｽｹｯﾄ Engine Basement Gasket	1	1		
11-29	346-67116-0	ｴﾝｼﾞﾝﾍﾞｰｽｼｰﾙ Engine Basement Seal	2	2		
11-30	346-60984-0	ｻﾌﾞｳｫｰﾀﾊﾟｲﾌﾟﾌﾟﾗｸﾞ Sub Water Pipe Plug	1	1		Option

トランスミッション・ウォータポンプ

Fig. 12 TRANSMISSION・WATER PUMP

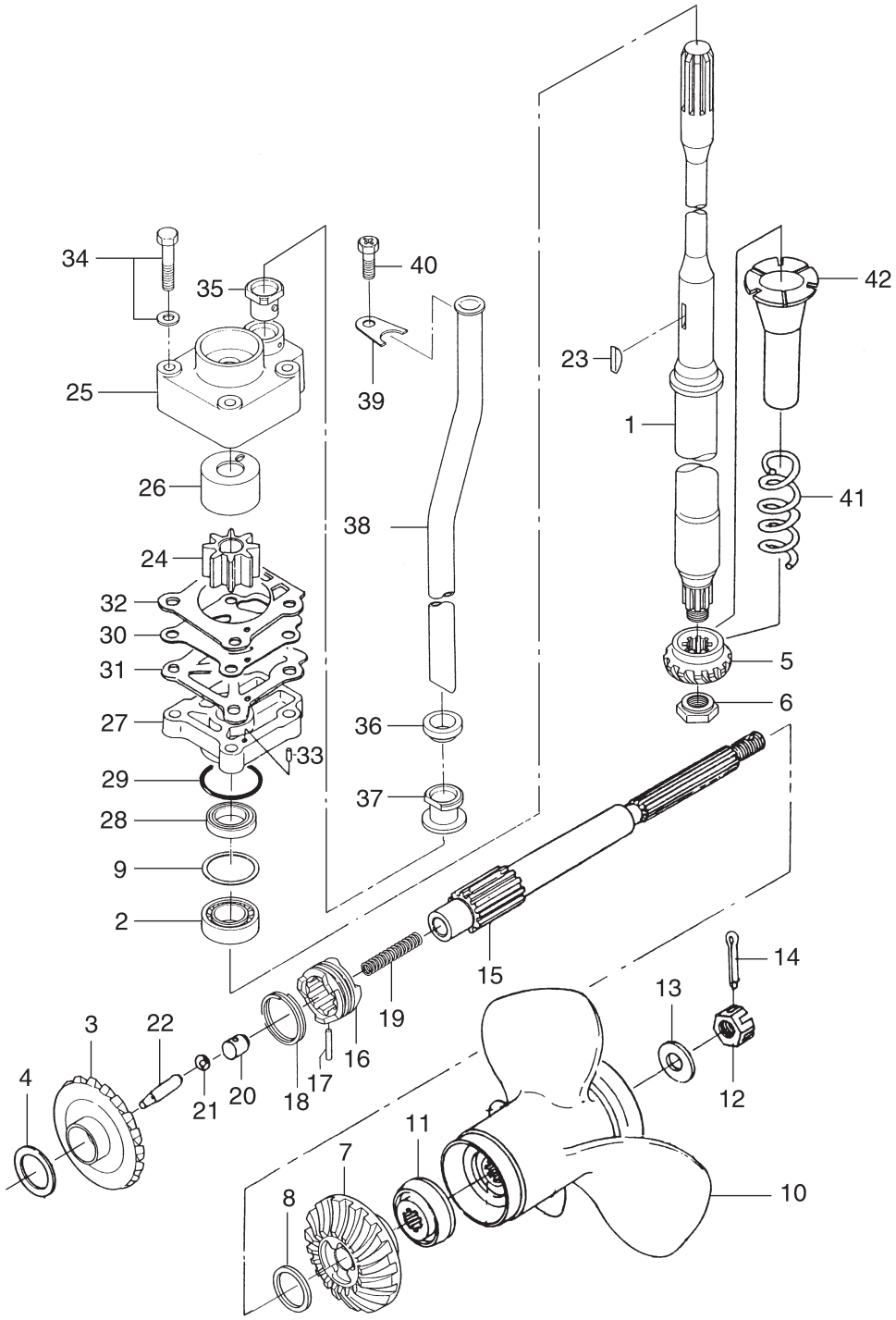

見出番号 Ref. No.	部品番号 Part No.	部　品　名 Description	個数 Q'ty 30 A4	 25 C3		備　考 Remarks
12-1	346-64301-5	ﾄﾞﾗｲﾌﾞｼｬﾌﾄ S Drive Shaft “S”	1	1		for Transom “S”
	346-64302-5	ﾄﾞﾗｲﾌﾞｼｬﾌﾄ L Drive Shaft “L”	1	1		for Transom “L”
	346-64303-5	ﾄﾞﾗｲﾌﾞｼｬﾌﾄ UL Drive Shaft “UL”	1	1		for Transom “UL”
12-2	346-60213-0	ﾍﾞｱﾘﾝｸﾞ、32004 Bearing, 32004	1	1		
12-3	346-64010-1	ﾍﾞﾍﾞﾙｷﾞﾔ A Bevel Gear “A”	1	1		30A3 # 30720～ 25C2 # 40911～
12-4	369-64081-1	ｼﾑ、26.5-34.8-0.1 Shim, 26.5-34.8-0.1	AR	AR		
	369-64082-1	ｼﾑ、26.5-34.8-0.15 Shim, 26.5-34.8-0.15	AR	AR		
12-5	346-64020-1	ﾍﾞﾍﾞﾙｷﾞﾔ B Bevel Gear “B”	1	1		
12-6	346-64027-1	ﾍﾞﾍﾞﾙｷﾞﾔ B ﾅｯﾄ Bevel Gear “B” Nut	1	1		
12-7	346-64030-0	ﾍﾞﾍﾞﾙｷﾞﾔ C Bevel Gear “C”	1	1		
12-8	346-64032-0	ﾜｯｼｬ、18-24-1.5 Washer, 18-24-1.5	1	1		
12-9	346-64081-0	ｼﾑ、35-41.9-0.1 Shim, 35-41.9-0.1	AR	AR		
	346-64082-0	ｼﾑ、35-41.9-0.15 Shim, 35-41.9-0.15	AR	AR		
	346-64083-0	ｼﾑ、35-41.9-0.3 Shim, 35-41.9-0.3	AR	AR		
	346-64084-0	ｼﾑ、35-41.9-0.5 Shim, 35-41.9-0.5	AR	AR		
12-10	346W64106-5	ﾌﾟﾛﾍﾟﾗ 8、(3×260×210) Propeller 8, (3×10.2×8.3)	1	1		
	3R0W64518-0	ﾌﾟﾛﾍﾟﾗ DS 9、(3×247×229) Propeller DS 9, (3×9.72×9.0)	1	1		
	3R0W64521-0	ﾌﾟﾛﾍﾟﾗ DS 10、(3×247×254) Propeller DS 10, (3×9.72×10.0)	1	1		Std. Transom “UL”
	3R0W64523-0	ﾌﾟﾛﾍﾟﾗ DS 11、(3×249×279) Propeller DS 11, (3×9.8×11.0)	1	1		Std. Transom “L”
	3R0W64525-0	ﾌﾟﾛﾍﾟﾗ DS 12、(3×249×305) Propeller DS 12, (3×9.8×12.0)	1	1		
	3R0W64527-0	ﾌﾟﾛﾍﾟﾗ DS 13、(3×244×330) Propeller DS 13, (3×9.6×13.0)	1	1		Std. Transom “S”
	346W64105-5	ﾌﾟﾛﾍﾟﾗ 14、(3×252×360) Propeller 8, (3×9.9×14.2)	1	1		
12-11	346-64231-5	ﾌﾟﾛﾍﾟﾗｽﾗｽﾄﾎﾙﾀﾞ Propeller Thrust Holder	1	1		
12-12	346-64121-5	ﾌﾟﾛﾍﾟﾗﾅｯﾄ Propeller Nut	1	1		
12-13	346-64124-5	ﾜｯｼｬ、12.5-32-2.5 Washer, 12.5-32-2.5	1	1		
12-14	951503-0322	ｽﾌﾟﾘｯﾄﾋﾟﾝ、3-22 Split Pin, 3-22	1	1		
12-15	346-64211-6	ﾌﾟﾛﾍﾟﾗｼｬﾌﾄ Propeller Shaft	1	1		
12-16	346-64215-1	ｸﾗｯﾁ Clutch	1	1		
12-17	346-64218-0	ｸﾗｯﾁﾋﾟﾝ Clutch Pin	1	1		
12-18	346-64219-0	ｸﾗｯﾁﾋﾟﾝｽﾅｯﾌﾟ Clutch Pin Snap	1	1		

トランスミッション・ウォータポンプ

Fig. 12 TRANSMISSION・WATER PUMP

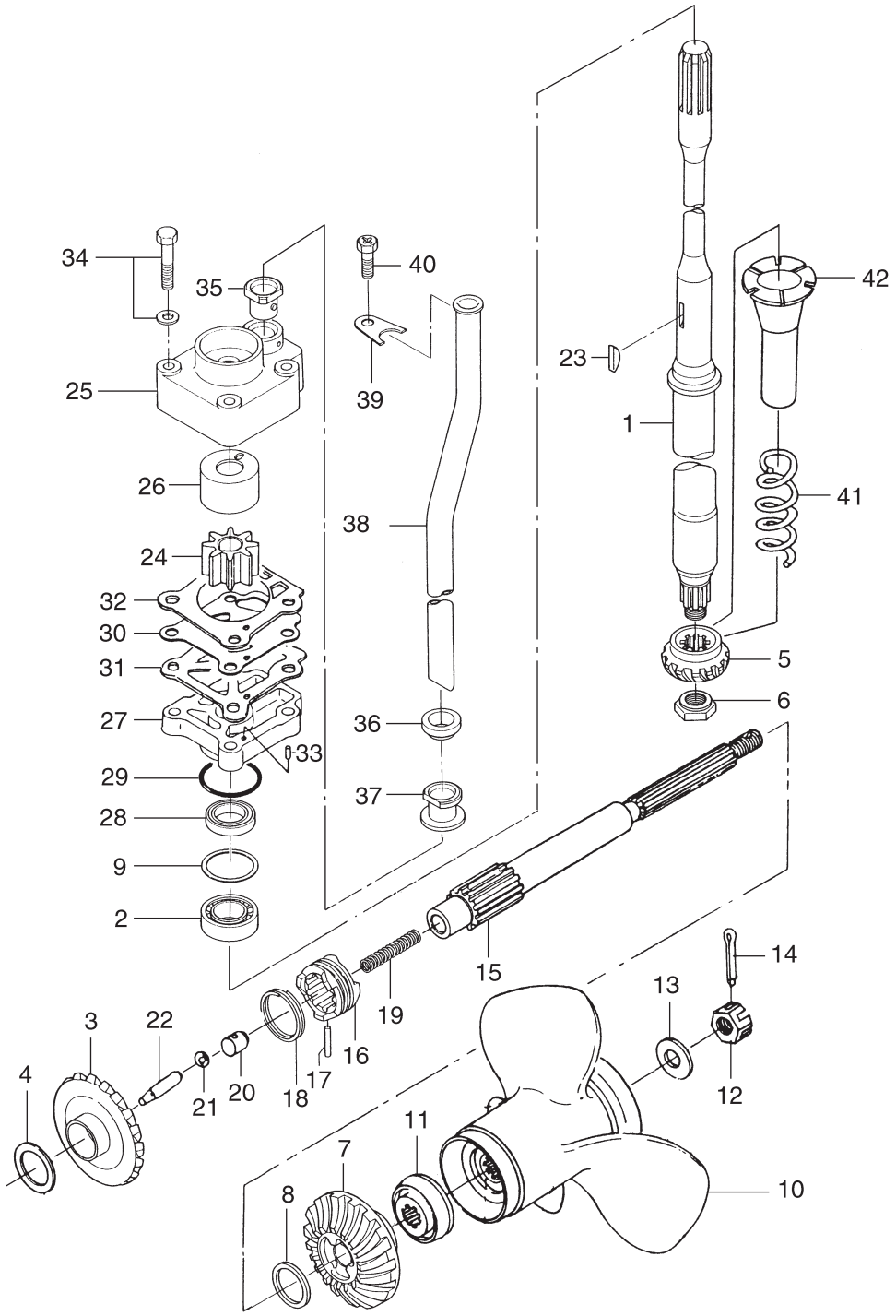

見出番号 Ref. No.	部品番号 Part No.	部　品　名 Description	個数 Q'ty 30 A4	 25 C3		備　考 Remarks
12-19	332-64221-0	ｸﾗｯﾁｽﾌﾟﾘﾝｸﾞ Spring, Clutch	1	1		
12-20	350-64222-0	ｸﾗｯﾁｽﾌﾟﾘﾝｸﾞﾘﾃｰﾅ Clutch Spring Retainer	1	1		
12-21	965002-0803	ｽﾁｰﾙﾎﾞｰﾙ、3/8 Steel Ball, 3/8	1	1		30A3 # 30720～ 25C2 # 40911～
12-22	3C8-64223-1	ｸﾗｯﾁﾌﾟｯｼｭﾛｯﾄﾞ Clutch Push Rod	1	1		
12-23	332-65022-0	ﾎﾟﾝﾌﾟｲﾝﾍﾟﾗｷｰ Pump Impeller Key	1	1		
12-24	345-65021-0	ｳｫｰﾀﾎﾟﾝﾌﾟｲﾝﾍﾟﾗ Water Pump Impeller	1	1		
12-25	348-65016-1	ﾎﾟﾝﾌﾟｹｰｽ (ｱｯﾊﾟ) Pump Case (Upper)	1	1		
12-26	348-65011-0	ﾎﾟﾝﾌﾟｹｰｽﾗｲﾅ Pump Case Liner	1	1		
12-27	346-65017-2	ﾎﾟﾝﾌﾟｹｰｽ (ﾛﾜ) Pump Case (Lower)	1	1		30A3 # 31283～ 25C2 # 41596～
12-28	346-65013-0	ｵｲﾙｼｰﾙ、17-30-9 Oil Seal, 17-30-9	1	1		
12-29	336-62415-0	O ﾘﾝｸﾞ、3.5-36 O-Ring, 3.5-36	1	1		
12-30	348-65025-0	ｳｫｰﾀﾎﾟﾝﾌﾟｶﾞｲﾄﾞﾌﾟﾚｰﾄ Water Pump Guide Plate	1	1		
12-31	348-65029-1	ﾎﾟﾝﾌﾟｶﾞｲﾄﾞﾌﾟﾚｰﾄｶﾞｽｹｯﾄ Pump Guide Plate Gasket	1	1		
12-32	348-65018-0	ﾎﾟﾝﾌﾟｹｰｽｶﾞｽｹｯﾄ (ｱｯﾊﾟ) Pump Case Gasket (Upper)	1	1		
12-33	334-65012-0	ﾀﾞｳｴﾙﾋﾟﾝ、4-10 Dowel Pin, 4-10	2	2		
12-34	910113-5652	ﾎﾞﾙﾄ Bolt	4	4		
12-35	3B7-65014-0	ｳｫｰﾀﾊﾟｲﾌﾟｼｰﾙ (ﾛﾜ) Water Pipe Seal (Lower)	1	1		
12-36	346-65206-0	ｳｫｰﾀﾊﾟｲﾌﾟｼｰﾙ (ｱｯﾊﾟ) Water Pipe Seal (Upper)	1	1		
12-37	346-65204-0	ｳｫｰﾀﾊﾟｲﾌﾟｵｰｸﾞｼﾞｭｱﾘｰﾏｳﾝﾄ Water Pipe Auxiliary Mount	1	1		Water Pipe Lock Rubber
12-38	346-65100-0	ｳｫｰﾀﾊﾟｲﾌﾟ　S Water Pipe “S”	1	1		for Transom “S”
	346-65110-0	ｳｫｰﾀﾊﾟｲﾌﾟ　L Water Pipe “L”	1	1		for Transom “L”
	346-65120-0	ｳｫｰﾀﾊﾟｲﾌﾟ　UL Water Pipe “UL”	1	1		for Transom “UL”
12-39	346-65203-0	ｳｫｰﾀﾊﾟｲﾌﾟﾛｯｸﾌﾟﾚｰﾄ Water Pipe Lock Plate	1	1		
12-40	910403-0610	ﾎﾞﾙﾄ Bolt	1	1		
12-41	346-64327-0	ﾄﾞﾗｲﾌﾞｼｬﾌﾄｽﾌﾟﾘﾝｸﾞ Drive Shaft Spring	1	1		
12-42	346-64328-0	ﾄﾞﾗｲﾌﾞｼｬﾌﾄｽﾌﾟﾘﾝｸﾞｶﾞｲﾄﾞ Drive Shaft Spring Guide	1	1		

ギヤシフト　　25C2 #40911 ～
Fig. 13　GEAR SHIFT　30A3 #30720 ～

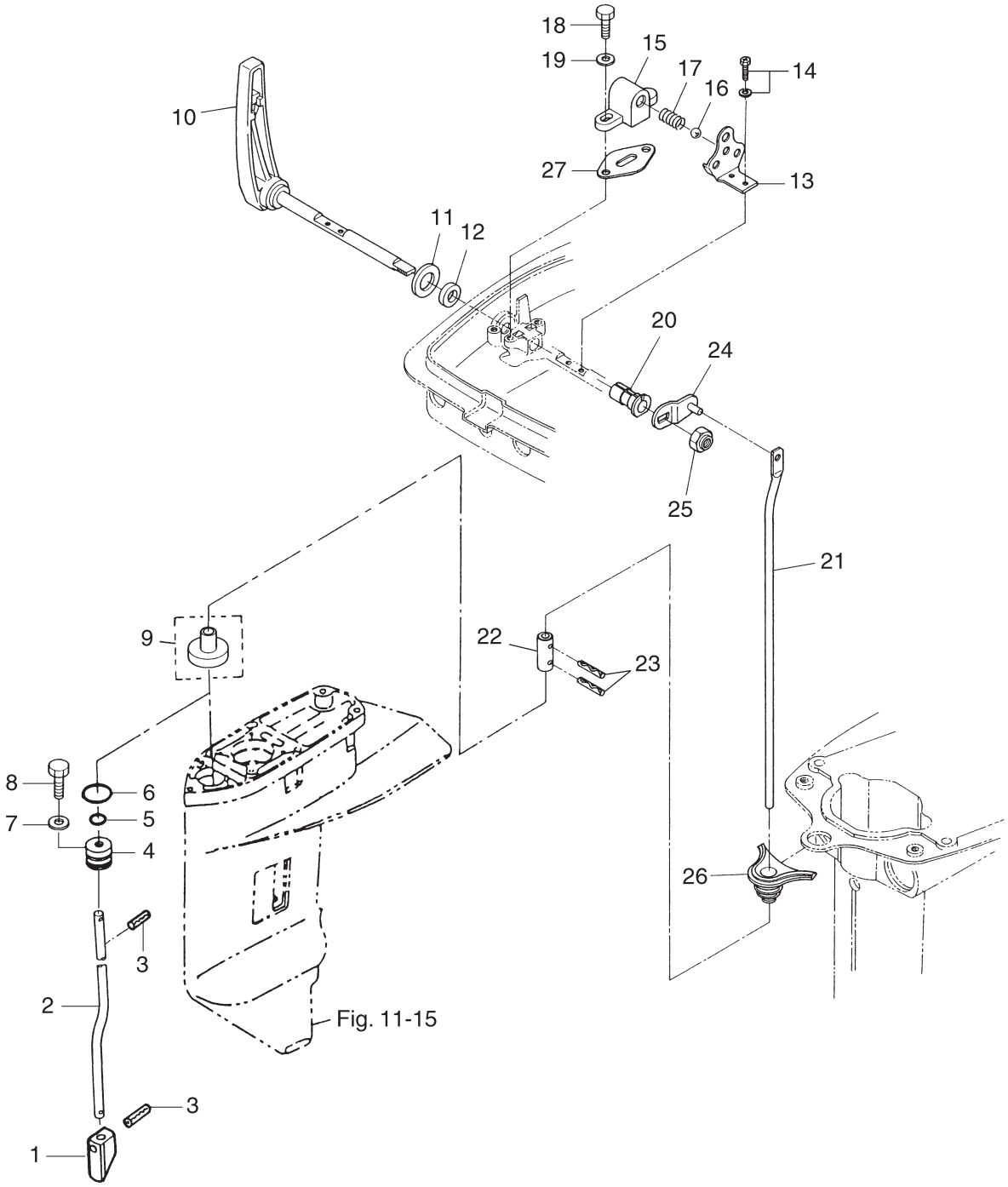

見出番号 Ref. No.	部品番号 Part No.	部　品　名 Description	個数 Q'ty 30 A4	 25 C3		備　考 Remarks
13-1	3C8-66011-0	ｸﾗｯﾁｶﾑ Clutch Cam	1	1		
13-2	346-66012-1	ｶﾑﾛｯﾄﾞ S Cam Rod “S”	1	1		for Transom “S”
	346-66013-1	ｶﾑﾛｯﾄﾞ L Cam Rod “L”	1	1		for Transom “L”
	346-66014-1	ｶﾑﾛｯﾄﾞ UL Cam Rod “UL”	1	1		for Transom “UL”
13-3	951407-0312	ｽﾌﾟﾘｸﾞﾋﾟﾝ、3-12 Spring Pin, 3-12	2	2		
13-4	3C8-66031-1	ｶﾑﾛｯﾄﾞﾌﾞｯｼﾝｸﾞ Cam Rod Bushing	1	1		
13-5	332-66021-0	O ﾘﾝｸﾞ、2.4-5.8 O-Ring, 2.4-5.8	1	1		
13-6	3C8-66032-0	O ﾘﾝｸﾞ、3.5-21.7 O-Ring, 3.5-21.7	1	1		
13-7	3R0-66308-0	ﾜｯｼｬ、6-16-1.5 Washer, 6-16-1.5	1	1		or 3C8-66308-0
13-8	910103-6612	ﾎﾞﾙﾄ Bolt	1	1		
13-9	346-66037-0	ｶﾑﾛｯﾄﾞﾎﾙﾀﾞ Cam Rod Holder	1	1		for Transom “UL”
13-10	346Q66110-0	ｼﾌﾄﾚﾊﾞｰ Shift Lever	1	1		
13-11	346-66138-0	ｽﾍﾟｰｻ、18.2-26-3 Spacer, 18.2-26-3	1	1		
13-12	345-66137-0	ｵｲﾙｼｰﾙ、10-20-4 Oil Seal, 10-20-4	1	1		
13-13	346-66121-0	ｼﾌﾄﾚﾊﾞｰｽﾄｯﾊﾟﾌﾟﾚｰﾄ Shift Lever Stopper Plate	1	1		
13-14	910903-6512	ｽｸﾘｭ Screw	2	2		
13-15	345-66115-0	ｼﾌﾄﾚﾊﾞｰｽﾄｯﾊﾟﾎﾙﾀﾞ Shift Lever Stopper Holder	1	1		
13-16	965002-1605	ｽﾁｰﾙﾎﾞｰﾙ、5/16 Steel Ball, 5/16	1	1		
13-17	332-66112-0	ｼﾌﾄﾚﾊﾞｰｽﾄｯﾊﾟｽﾌﾟﾘﾝｸﾞ Shift Lever Stopper Spring	1	1		
13-18	910114-0616	ﾎﾞﾙﾄ Bolt	2	2		
13-19	940103-0600	ﾜｯｼｬ Washer	2	2		or 940113-0600
13-20	346-67101-0	ﾌﾞｯｼﾝｸﾞ、10-12.8-28.5 Bushing, 10-12.8-28.5	1	1		
13-21	346-66211-1	ｼﾌﾄﾛｯﾄﾞ Shift Rod	1	1		
13-22	346-66241-1	ｼﾌﾄﾛｯﾄﾞｼﾞｮｲﾝﾄ Shift Rod Joint	1	1		
13-23	951403-0312	ｽﾌﾟﾘﾝｸﾞﾋﾟﾝ、3-12 Spring Pin, 3-12	2	2		
13-24	346-66225-1	ｼﾌﾄﾛｯﾄﾞﾚﾊﾞｰ Shift Rod Lever	1	1		
13-25	930403-1000	ﾅｲﾛﾝﾅｯﾄ、10P-1.5 Nylon Nut, 10P-1.5	1	1		
13-26	346-66226-0	ｼﾌﾄﾛｯﾄﾞｸﾞﾛﾒｯﾄ Shift Rod Grommet	1	1		
13-27	345-66119-0	ｼﾌﾄﾚﾊﾞｰｽﾄｯﾊﾟｼﾑ Shift Lever Stopper Shim	AR	AR		

ブラケット　25C2 #42833 ～
Fig. 14　BRACKET　30A3 #31959 ～

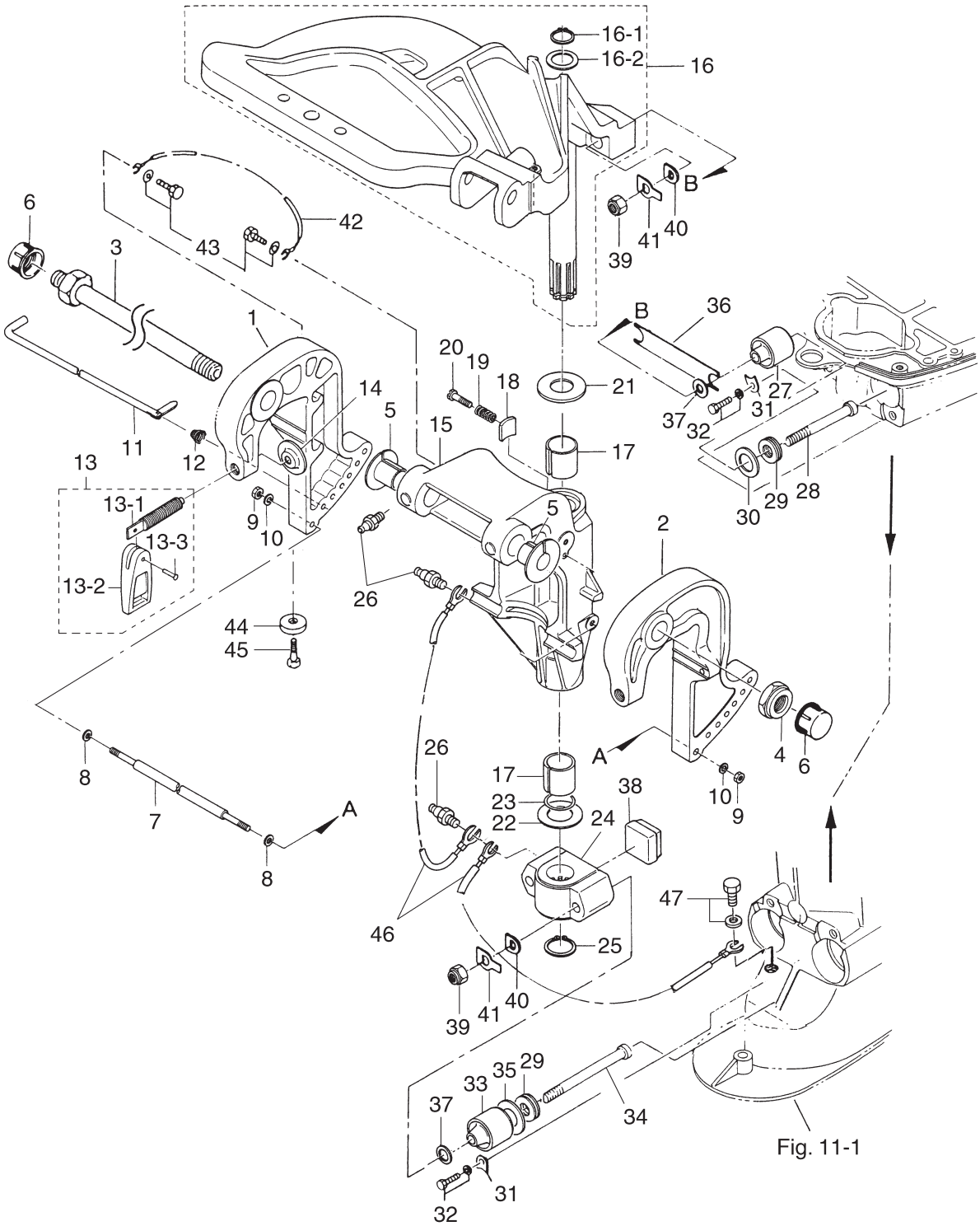

見出番号 Ref. No.	部品番号 Part No.	部　品　名 Description	個数 Q'ty 30 A4	 25 C3		備　考 Remarks
14-1	3AEQ62112-2	ｸﾗﾝﾌﾟﾌﾞﾗｹｯﾄ (ﾗｲﾄ) Clamp Bracket (Right)	1	1		Starboard # 048912 XE～
	349Q62112-0	ｸﾗﾝﾌﾟﾌﾞﾗｹｯﾄ (ﾗｲﾄ) Clamp Bracket (Right)	(1)	(1)		Starboard ～# 045350 XE
14-2	3AEQ62113-2	ｸﾗﾝﾌﾟﾌﾞﾗｹｯﾄ (ﾚﾌﾄ) Clamp Bracket (Left)	1	1		Port # 048912 XE～
	349Q62113-0	ｸﾗﾝﾌﾟﾌﾞﾗｹｯﾄ (ﾚﾌﾄ) Clamp Bracket (Left)	(1)	(1)		Port ～# 045350 XE
14-3	3AC-62191-0	ｽｲﾍﾞﾙﾌﾞﾗｹｯﾄｼｬﾌﾄ Swivel Bracket Shaft	1	1		Bracket Bolt or 346-62191-0
14-4	346-62124-1	ﾅｲﾛﾝﾅｯﾄ、7/8 Nylon Nut, 7/8	1	1		
14-5	349-62126-0	ﾌﾞﾗｹｯﾄｼｬﾌﾄﾌﾞｯｼﾝｸﾞ Bracket Shaft Bushing	2	2		
14-6	346-62127-0	ｷｬｯﾌﾟ Cap	2	2		
14-7	346-62117-1	ﾃﾞｨｽﾀﾝｽﾋﾟｰｽ Distance Piece	1	1		
14-8	940113-0600	ﾜｯｼｬ Washer	2	2		
14-9	930113-0600	ﾅｯﾄ Nut	2	2		
14-10	940113-0600	ﾜｯｼｬ Washer	2	2		
14-11	345-62121-1	ｽﾗｽﾄﾛｯﾄﾞ Thrust Rod	1	1		
14-12	345-62122-2	ｽﾗｽﾄﾛｯﾄﾞｽﾌﾟﾘﾝｸﾞ Thrust Rod Spring	1	1		
14-13	3AAQ62100-0	ｸﾗﾝﾌﾟｽｸﾘｭｱｯｼ Clamp Screw Ass'y	2	2		for 3AE Type Clamp Bracket # 048912 XE～
	398Q62100-0	ｸﾗﾝﾌﾟｽｸﾘｭｱｯｼ Clamp Screw Ass'y	(2)	(2)		for 349 Type Clamp Bracket ～# 045350 XE
14-13-1	3AA-62103-0	ｸﾗﾝﾌﾟｽｸﾘｭ (M14 P2.0) * Clamp Screw (M14 P2.0)	2	2		for 3AE Type Clamp Bracket # 048912 XE～
	398-62103-0	ｸﾗﾝﾌﾟｽｸﾘｭ (W 1/2) * Clamp Screw (W 1/2)	(2)	(2)		for 349 Type Clamp Bracket ～# 045350 XE
14-13-2	332Q62102-1	ｸﾗﾝﾌﾟｽｸﾘｭﾊﾝﾄﾞﾙ * Clamp Screw Handle	2	2		
14-13-3	3C8-62104-1	ﾘﾍﾞｯﾄ、3-22 * Rivet, 3-22	2	2		
14-14	332-62101-0	ｸﾗﾝﾌﾟｽｸﾘｭﾊﾟｯﾄﾞ Clamp Screw Pad	1	1		
14-15	349Q62310-2	ｽｲﾍﾞﾙﾌﾞﾗｹｯﾄ Swivel Bracket	1	1		(30A3 # 34436～Silver gray) (25C2 # 48728～Silver gray)
14-16	346Q62010-0	ｽﾃｱﾘﾝｸﾞｼｬﾌﾄ Steering Shaft	1	1		
14-16-1	945103-2200	C ﾘﾝｸﾞ、d=22 * C-Ring, d=22	1	1		
14-16-2	346-62412-1	ﾜｯｼｬ、22.6-30-2 * Washer, 22.6-30-2	1	1		
14-17	345-62417-0	ﾌﾞｯｼﾝｸﾞ、26-32 Bushing, 26-32	2	2		
14-18	345-62441-0	ﾌﾞﾗｹｯﾄﾌﾘｸｼｮﾝﾌﾟﾚｰﾄ Bracket Friction Plate	1	1		
14-19	346-62421-1	ﾌﾘｸｼｮﾝﾌﾟﾚｰﾄｽﾌﾟﾘﾝｸﾞ Friction Plate Spring	1	1		
14-20	910103-0830	ﾎﾞﾙﾄ Bolt	1	1		or 910113-0830
14-21	3A0-62423-2	ｽﾗｽﾄﾌﾟﾚｰﾄ、27-50-1 Thrust Plate, 27-50-1	1	1		30A3 # 34436～ 25C2 # 48728～

ブラケット　25C2 #42833 ～
Fig. 14　BRACKET　30A3 #31959 ～

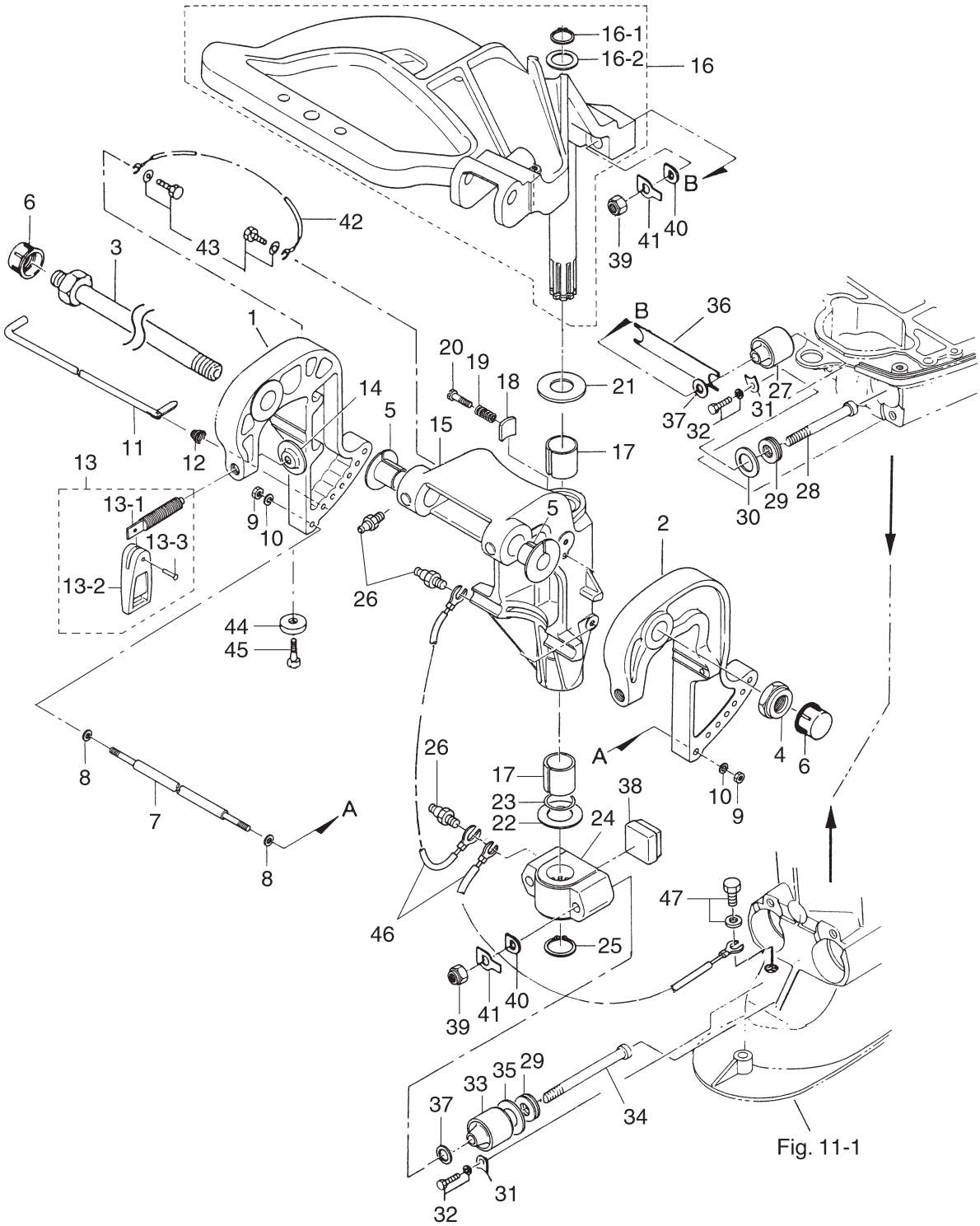

見出番号 Ref. No.	部品番号 Part No.	部　品　名 Description	個数 Q'ty 30 A4	 25 C3		備　考 Remarks
14-22	346-62424-1	ｽﾗｽﾄﾌﾟﾚｰﾄ、26.5-46-1 Thrust Plate, 26.5-46-1	1	1		
14-23	345-62415-0	O ﾘﾝｸﾞ、3.5-25.7 O-Ring, 3.5-25.7	1	1		
14-24	346Q61411-2	ﾏｳﾝﾄﾌﾞﾗｹｯﾄ Mount Bracket	1	1		
14-25	945103-2500	C ﾘﾝｸﾞ、d=25 C-Ring, d=25	1	1		
14-26	344-67177-0	ｸﾞﾘｽﾆｯﾌﾟﾙ Grease Fitting	5	5		
14-27	346-61301-0	ﾗﾊﾞｰﾏｳﾝﾄ (ｱｯﾊﾟ) Rubber Mount (Upper)	2	2		
14-28	346-61307-2	ﾗﾊﾞｰﾏｳﾝﾄﾎﾞﾙﾄ (ｱｯﾊﾟ) Rubber Mount Bolt (Upper)	2	2		
14-29	346-61333-0	ﾀﾞﾝﾊﾟﾌﾟﾚｰﾄ Damper Plate	4	4		
14-30	346-61335-0	ﾛｯｸﾌﾟﾚｰﾄ、20-31.7-3 Lock Plate, 20-31.7-3	2	2		
14-31	346-61312-1	ﾗﾊﾞｰﾏｳﾝﾄﾘﾃｰﾅ Rubber Mount Retainer	4	4		
14-32	910113-5820	ﾎﾞﾙﾄ Bolt	1	1		
14-33	346-61302-0	ﾗﾊﾞｰﾏｳﾝﾄ (ﾛﾜ) Rubber Mount (Lower)	2	2		
14-34	346-61321-2	ﾗﾊﾞｰﾏｳﾝﾄﾎﾞﾙﾄ (ﾛﾜ) Rubber Mount Bolt (Lower)	2	2		
14-35	346-61334-0	ﾛｯｸﾌﾟﾚｰﾄ、21-35.7-3 Lock Plate, 21-35.7-3	2	2		
14-36	346-61337-0	ﾀﾞﾝﾊﾟ (ｱｯﾊﾟ) Damper (Upper)	1	1		
14-37	940113-1000	ﾜｯｼｬ Washer	4	4		
14-38	346-61336-0	ﾀﾞﾝﾊﾟ (ﾛﾜ) Damper (Lower)	1	1		
14-39	930103-1000	ﾅｯﾄ Nut	4	4		or 930113-1000
14-40	345-61322-2	ﾗﾊﾞｰﾏｳﾝﾄﾜｯｼｬ Rubber Mount Washer	4	4		
14-41	346-61323-0	ﾗﾊﾞｰﾏｳﾝﾄﾛｯｸﾌﾟﾚｰﾄ Rubber Mount Lock Plate	4	4		
14-42	398-62396-1	ｱｰｽﾜｲﾔ Ground Cable	1	1		L=130
14-43	910103-5612	ﾎﾞﾙﾄ Bolt	2	2		
14-44	338-60218-2	ｱﾉｰﾄﾞ Anode	1	1		
14-45	910103-5620	ﾎﾞﾙﾄ Bolt	1	1		
14-46	3A3-62396-1	ｱｰｽﾜｲﾔ Ground Cable	2	2		L=110
14-47	910103-5610	ﾎﾞﾙﾄ Bolt	1	1		

リバースロック　　25C2 #42833 ～
Fig. 15　REVERSE LOCK　30A3 #31959 ～

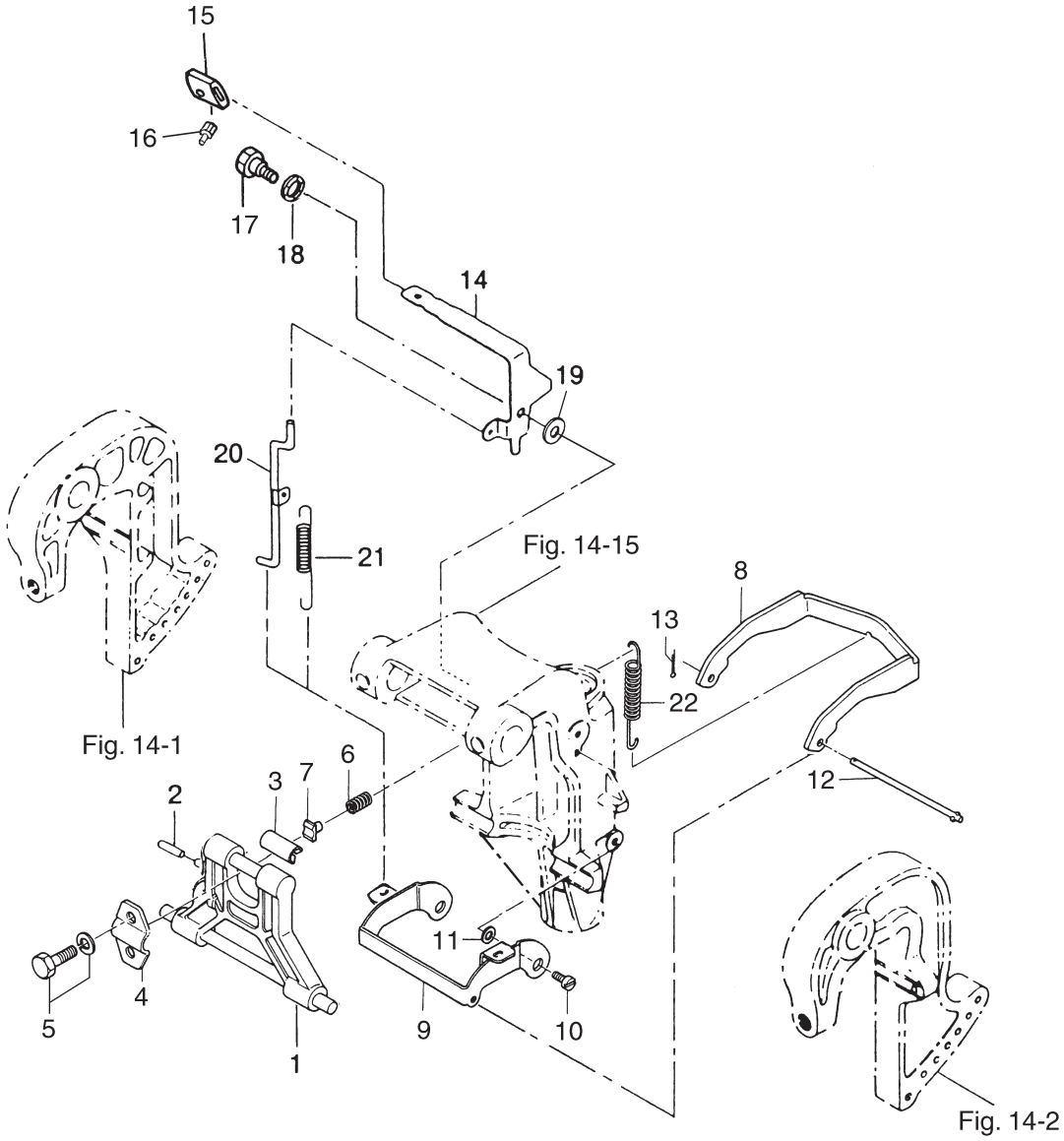

見出番号 Ref. No.	部品番号 Part No.	部　品　名 Description	個数 Q'ty 30 A4	 25 C3		備　考 Remarks
15-1	349Q62993-1	ﾁﾙﾄｽﾄｯﾊﾟ Tilt Stopper	1	1		(# 043187XC～)
15-2	951403-0640	ｽﾌﾟﾘﾝｸﾞﾋﾟﾝ、6-40 Spring Pin, 6-40	1	1		
15-3	346-62437-0	ﾌﾞｯｼﾝｸﾞ、10.2-12-29.5 Bushing, 10.2-12-29.5	1	1		
15-4	346-62439-1	ﾁﾙﾄｽﾄｯﾊﾟｾｯﾄﾌﾟﾚｰﾄ Tilt Stopper Setting Plate	1	1		
15-5	910113-5820	ﾎﾞﾙﾄ Bolt	2	2		
15-6	3C8-62421-1	ﾁﾙﾄｽﾄｯﾊﾟﾌﾘｸｼｮﾝｽﾌﾟﾘﾝｸﾞ Tilt Stopper Friction Spring	1	1		
15-7	346-62438-0	ｾｯﾄﾋﾟｰｽ Set Piece	1	1		
15-8	346-66322-0	ﾘﾊﾞｰｽﾛｯｸ Reverse Lock	1	1		
15-9	349-66313-0	ﾘﾊﾞｰｽﾛｯｸｱｰﾑ Reverse Lock Arm	1	1		
15-10	336-66319-1	ﾘﾊﾞｰｽﾛｯｸｱｰﾑｼｬﾌﾄ Reverse Lock Arm Shaft	2	2		
15-11	3R0-66308-0	ﾜｯｼｬ、6-16-1.5 Washer, 6-16-1.5	2	2		
15-12	346-66321-0	ﾘﾊﾞｰｽﾛｯｸﾛｯﾄﾞ Reverse Lock Rod	1	1		
15-13	951503-0212	ｽﾌﾟﾘｯﾄﾋﾟﾝ、2-12 Split Pin, 2-12	1	1		
15-14	349-66311-0	ﾘﾊﾞｰｽﾛｯｸﾚﾊﾞｰ Reverse Lock Lever	1	1		
15-15	346-66333-0	ﾘﾊﾞｰｽﾛｯｸﾚﾊﾞｰｸﾞﾘｯﾌﾟ Reverse Lock Lever Grip	1	1		
15-16	346-66334-0	ｸﾞﾘｯﾌﾟｽﾄｯﾊﾟ Grip Stopper	1	1		
15-17	345-05214-1	ﾘﾊﾞｰｽﾛｯｸﾚﾊﾞｰｼｬﾌﾄ Reverse Lock Lever Shaft	1	1		
15-18	941403-0800	ｳｪｰﾌﾞﾜｯｼｬ、d=8 Wave Washer, d=8	2	2		
15-19	3R0-66308-0	ﾜｯｼｬ、6-16-1.5 Washer, 6-16-1.5	1	1		
15-20	349-66312-0	ﾘﾊﾞｰｽﾛｯｸﾘﾝｸ Reverse Lock Link	1	1		
15-21	346-66323-1	ﾘﾊﾞｰｽﾛｯｸﾚﾊﾞｰｽﾌﾟﾘﾝｸﾞ Reverse Lock Lever Spring	1	1		
15-22	346-66331-0	ﾘﾊﾞｰｽﾛｯｸｽﾌﾟﾘﾝｸﾞ S Reverse Lock Spring “S”	1	1		for Transom “S”
	3R0-66332-0	ﾘﾊﾞｰｽﾛｯｸｽﾌﾟﾘﾝｸﾞ L Reverse Lock Spring “L”	1	1		for Transom “L”, “UL”

モータカバー
Fig. 16 MOTOR COVER

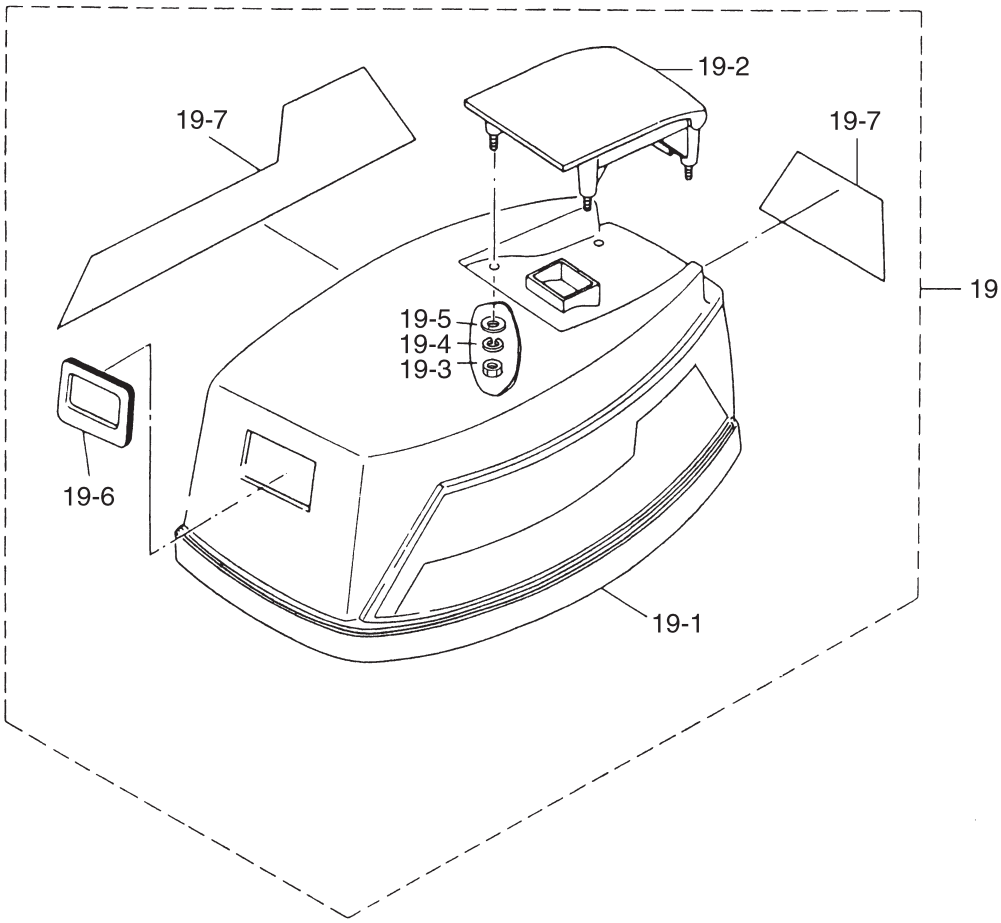

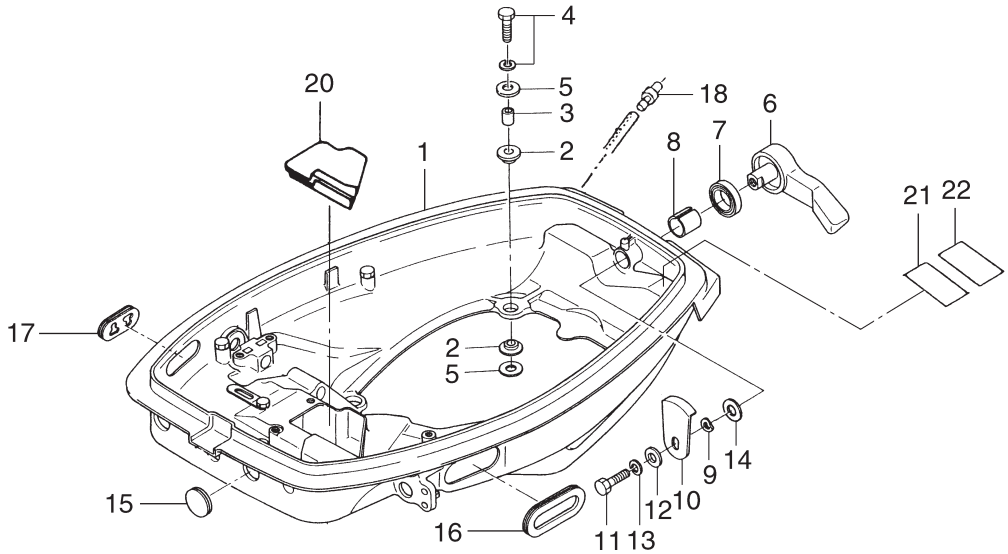

見出番号 Ref. No.	部品番号 Part No.	部　品　名 Description	個数 Q'ty 30 A4	 25 C3		備　考 Remarks
16-1	346Q67100-3	ﾎﾞﾄﾑｶｳﾙ Bottom Cowl	1	1		Motor Cover (Lower) 30A3#33577～,25C2#46214～
16-2	346-67113-0	ﾗﾊﾞｰﾏｳﾝﾄ、8.5-14-2.5 Rubber Mount, 8.5-14-2.5	8	8		
16-3	346-67114-0	ｽﾍﾟｰｻ、6.2-9-15.7 Spacer, 6.2-9-15.7	4	4		
16-4	910113-0630	ﾎﾞﾙﾄ Bolt	4	4		
16-5	346-67115-0	ﾜｯｼｬ、6.5-21-1 Washer, 6.5-21-1	4	4		
16-6	338Q67141-0	ﾌｯｸﾚﾊﾞｰ Hook Lever	1	1		
16-7	338-67147-0	ﾌｯｸﾚﾊﾞｰｼｰﾙﾘﾝｸﾞ Hook Lever Seal Ring	1	1		30A3 # 33577～ 25C2 # 46214～
16-8	350-67105-0	ﾌﾞｯｼﾝｸﾞ、14-16.5-17.7 Bushing, 14-16.5-17.7	1	1		
16-9	941403-1400	ｳｪｰﾌﾞﾜｯｼｬ、d=14 Wave Washer, d=14	1	1		
16-10	345-67142-1	ｶﾊﾞｰﾌｯｸ Cover Hook	1	1		
16-11	910103-0612	ﾎﾞﾙﾄ Bolt	1	1		
16-12	3R0-66308-0	ﾜｯｼｬ、6-16-1.5 Washer, 6-16-1.5	1	1		
16-13	941303-0600	ｽﾌﾟﾘﾝｸﾞﾜｯｼｬ Spring Washer	1	1		
16-14	3C8-67146-0	ﾜｯｼｬ、14-22-1 Washer, 14-22-1	1	1		
16-15	345-67161-0	ｸﾞﾛﾒｯﾄ、22-3 Grommet, 22-3	1	1		
16-16	346-67165-0	ﾎﾞﾄﾑｶｳﾙｸﾞﾛﾒｯﾄ B Bottom Cowl Grommet “B”	1	1		
16-17	353-67162-0	ﾊﾞｯﾃﾘｺｰﾄﾞｸﾞﾛﾒｯﾄ Battery Cable Grommet	1	1		
16-18	353-01138-0	ｳｫｰﾀﾆｯﾌﾟﾙ Water Nipple	1	1		
16-19	3P0Q67500-1	ﾄｯﾌﾟｶｳﾙ (ﾓｰﾀｰｶﾊﾞｰｱｯﾊﾟ) Top Cowl (Motor Cover Upper)	1	1		UNIQUE
16-19-1	361-67501-0	ﾄｯﾌﾟｶｳﾙｼｰﾙ ＊ Top Cowl Seal	1	1		L=1550
16-19-2	349Q67521-0	ﾁﾙﾄﾊﾝﾄﾞﾙ ＊ Tilt Handle	1	1		
16-19-3	930103-0600	ﾅｯﾄ ＊ Nut	4	4		or 930113-0600
16-19-4	941303-0600	ｽﾌﾟﾘﾝｸﾞﾜｯｼｬ ＊ Spring Washer	4	4		
16-19-5	309-70016-0	ﾜｯｼｬ、6.5-16-2 ＊ Washer, 6.5-16-2	4	4		
16-19-6	344-67503-0	ｽﾀｰﾀｼｰﾙ ＊ Starter Seal	1	1		
16-19-7	3P0Q87801-1	ﾃﾞｶﾙｾｯﾄ ＊ Decal Set	1 set	-		UNIQUE
	3P1Q87801-1	ﾃﾞｶﾙｾｯﾄ ＊ Decal Set	-	1 set		UNIQUE
16-20	346-67161-0	ﾎﾞﾄﾑｶｳﾙｸﾞﾛﾒｯﾄ D Bottom Cowl Grommet “D”	1	1		Option
16-21	332-72025-0	ｽﾊﾟｰｸﾌﾟﾗｸﾞﾃﾞｶﾙ Spark Plug Decal	1	1		
16-22	361-72026-0	ｽﾊﾟｰｸﾌﾟﾗｸﾞﾃﾞｶﾙ (ﾚｼﾞｽﾀﾝｽ) Spark Plug Decal (Resistance)	1	1		

セパレートフュ エルタンク (プラスティック) ・アクセサリー

Fig. 17 SEPARATE FUELE TANK (PLASTIC) ・ ACCESSORIES

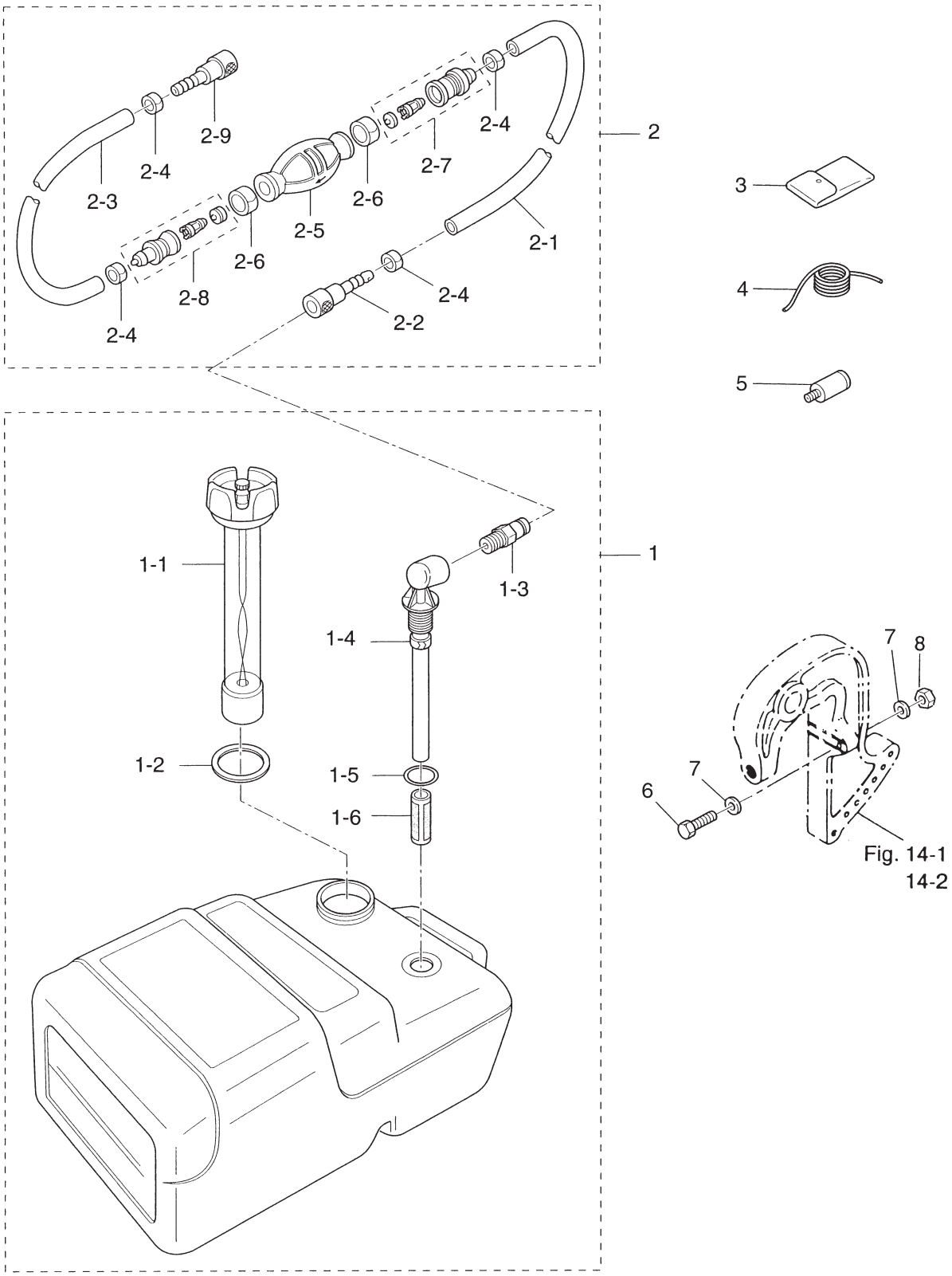

見出番号 Ref. No.	部品番号 Part No.	部　品　名 Description	個数 Q'ty 30 A4	 25 C3		備　考 Remarks
17-1	3C7-70177-0	ﾌｭｴﾙﾀﾝｸ (25L) Fuel Tank (25L)	1	1		UNIQUE
17-1-1	3C7-70050-0	ﾌｭｴﾙｹﾞｰｼﾞﾍﾞﾝﾃｨﾄﾞｷｬｯﾌﾟ * Fuel Gauge Vented Cap	1	1		
17-1-2	3C7-70021-0	ﾀﾝｸｷｬｯﾌﾟｶﾞｽｹｯﾄ * Tank Cap Gasket	1	1		
17-1-3	3E0-70270-0	ﾒｲﾙｸｲｯｸｺﾈｸﾀ * Male Quick Connector	1	1		
17-1-4	3C7-70155-0	ﾌｭｴﾙﾋﾟｯｸｱｯﾌﾟｴﾙﾎﾞ * Elbow Tubing and Clamp Ass'y	1	1		
17-1-5	3C7-70199-0	O ﾘﾝｸﾞ * O-Ring	1	1		
17-1-6	3C7-70113-0	ﾌｨﾙﾀ * Filter	1	1		
17-2	3B7-70200-3	ﾌﾟﾗｲﾏﾊﾞﾙﾌﾞｱｯｼ Primer Bulb Ass'y	1	1		
17-2-1	98AB-7-1600	ﾌｭｴﾙﾎｰｽ * Fuel Hose	1	1		
17-2-2	3B2-70281-0	ﾌｭｴﾙｺﾈｸﾀ (ﾀﾝｸ、ﾌｨﾒｰﾙ) * Fuel Connector (Tank side, Female)	1	1		
17-2-3	98AB-7-0700	ﾌｭｴﾙﾎｰｽ * Fuel Hose	1	1		
17-2-4	332-70201-0	ｸﾗﾝﾌﾟ * Clamp	4	4		
17-2-5	3C7-70211-0	ﾌﾟﾗｲﾏﾊﾞﾙﾌﾞ * Primer Bulb	1	1		
17-2-6	3C7-70217-0	ｸﾗﾝﾌﾟ * Clamp	2	2		
17-2-7	3C7-70220-1	ｼﾞｮｲﾝﾄｱｯｼ (IN) * Joint Ass'y (Inlet)	1	1		
17-2-8	3C7-70224-1	ｼﾞｮｲﾝﾄｱｯｼ (OUT) * Joint Ass'y (Outlet)	1	1		
17-2-9	3B2-70250-1	ﾌｭｴﾙｺﾈｸﾀ (ｴﾝｼﾞﾝ、ﾌｨﾒｰﾙ) * Fuel Connector (Engine side, Female)	1	1		
17-3	3C8-72100-1	ﾂｰﾙ Tool	1	1		
17-4	3B7-72201-0	ﾛｰﾌﾟ Rope	1	1		φ6-1600
17-5	336-60007-0	ﾌﾗｯｼﾝｸﾞｱﾀｯﾁﾒﾝﾄ Flushing Attachment	1	1		ｵﾌﾟｼｮﾝ Option
17-6	916113-0885	ﾎﾞﾙﾄ Bolt	2	2		
17-7	940113-0800	ﾜｯｼｬ Washer	4	4		EP ﾀｲﾌﾟは標準 “EP” Type Standard
17-8	930113-0800	ﾅｯﾄ Nut	2	2		

オプショナルパーツ (I) リモートコントロール
Fig. 18 OPTIONAL PARTS (I) REMOTE CONTROL

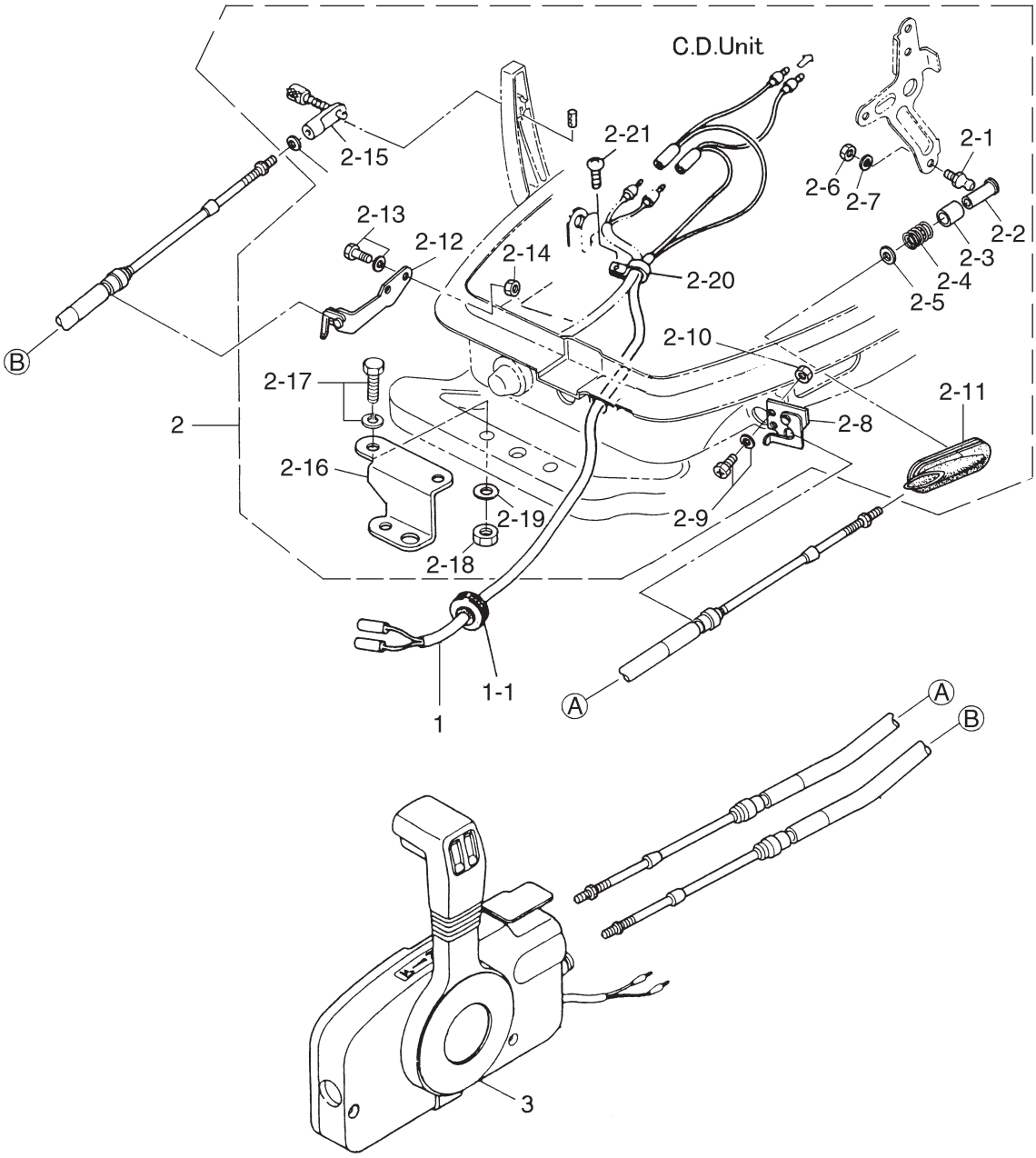

見出番号 Ref. No.	部品番号 Part No.	部　品　名 Description	個数 Q'ty 30 A4	 25 C3		備　考 Remarks
18-1	361-83853-0	ﾘﾓｺﾝ ｽﾄｯﾌﾟｺｰﾄﾞ 3.9m R.C. Stop Cord 3.9m (12.8feet)	1	1		
	361-83858-0	ﾘﾓｺﾝ ｽﾄｯﾌﾟｺｰﾄﾞ 5.9m R.C. Stop Cord 5.9m (19.4feet)	1	1		
18-1-1	345-76023-0	ｸﾞﾛﾒｯﾄ、ｽﾄｯﾌﾟｺｰﾄﾞ * Grommet, Stop Cord	1	1		
18-2	3A1-83880-1	ﾘﾓｺﾝ ﾌｨﾃﾝｸﾞﾊﾟｰﾂ Remote Control Fitting Parts	1	1		
18-2-1	345-83721-0	ﾎﾞｰﾙｼﾞｮｲﾝﾄ * Ball Joint	1	1		
18-2-2	3A1-83722-0	ﾎﾞｰﾙｼﾞｮｲﾝﾄﾎﾙﾀﾞ * Ball Joint Holder	1	1		
18-2-3	332-83723-0	ﾎﾙﾀﾞｷｬｯﾌﾟ * Holder Cap	1	1		
18-2-4	332-83724-0	ｷｬｯﾌﾟｽﾌﾟﾘﾝｸﾞ * Cap Spring	1	1		
18-2-5	332-83725-0	ﾜｯｼｬ、5.5-14-1.2 * Washer, 5.5-14-1.2	2	2		
18-2-6	930103-0600	ﾅｯﾄ * Nut	1	1		or 930113-0600
18-2-7	941303-0600	ｽﾌﾟﾘﾝｸﾞﾜｯｼｬ * Spring Washer	1	1		
18-2-8	345-83820-0	ｹｰﾌﾞﾙｸﾘｯﾌﾟ * Cable Clip	1	1		
18-2-9	910403-6518	ﾎﾞﾙﾄ * Bolt	2	2		
18-2-10	930103-0500	ﾅｯﾄ * Nut	2	2		
18-2-11	346-83732-0	ｽﾛｯﾄﾙｹｰﾌﾞﾙｸﾞﾛﾒｯﾄ * Throttle Cable Grommet	1	1		
18-2-12	346-83870-0	ｸﾗｯﾁｹｰﾌﾞﾙｸﾘｯﾌﾟ * Clutch Cable Clip	1	1		
18-2-13	910103-6620	ﾎﾞﾙﾄ * Bolt	2	2		
18-2-14	930103-0600	ﾅｯﾄ * Nut	2	2		or 930113-0600
18-2-15	3A1-83710-1	ｹｰﾌﾞﾙｼﾞｮｲﾝﾄｱｯｼ * Cable Joint Ass'y	1	1		
18-2-16	346-84830-1	ｽﾃｱﾘﾝｸﾞﾌｯｸﾌﾟﾚｰﾄ * Steering Hook Plate	1	1		
18-2-17	910103-6830	ﾎﾞﾙﾄ * Bolt	2	2		or 910113-0830
18-2-18	930103-0800	ﾅｯﾄ * Nut	2	2		or 930113-0800
18-2-19	940103-0800	ﾜｯｼｬ * Washer	2	2		or 940113-0800
18-2-20	336-06973-0	ｸﾗﾝﾌﾟ、6-9.5L * Clamp, 6-9.5L	1	1		
18-2-21	921503-0612	ｽｸﾘｭ * Screw	1	1		or 921513-0612
18-3	3B7Q84360-1	ﾘﾓｰﾄｺﾝﾄﾛｰﾙﾎﾞｯｸｽ (RC5D) Remote Control Box (RC5D)	1	1		for MF/EF Type UNIQUE
	3B7Q84350-3	ﾘﾓｰﾄｺﾝﾄﾛｰﾙﾎﾞｯｸｽ (RC5C) Remote Control Box (RC5C)	1	1		for EP Type UNIQUE

オプショナルパーツ（Ⅱ）エレクトリックスタータ（P, F タイ プ共通）

Fig. 19 OPTIONAL PARTS (II) ELECTRIC STARTER (Common use for P & F types)

位 置 Position	ｺｰﾄﾞ色 Color of lead wires
A	黄 Yellow
B	白 White
C	赤 Red
D	茶・青 Brown・Blue
E	緑・黒 Green・Black

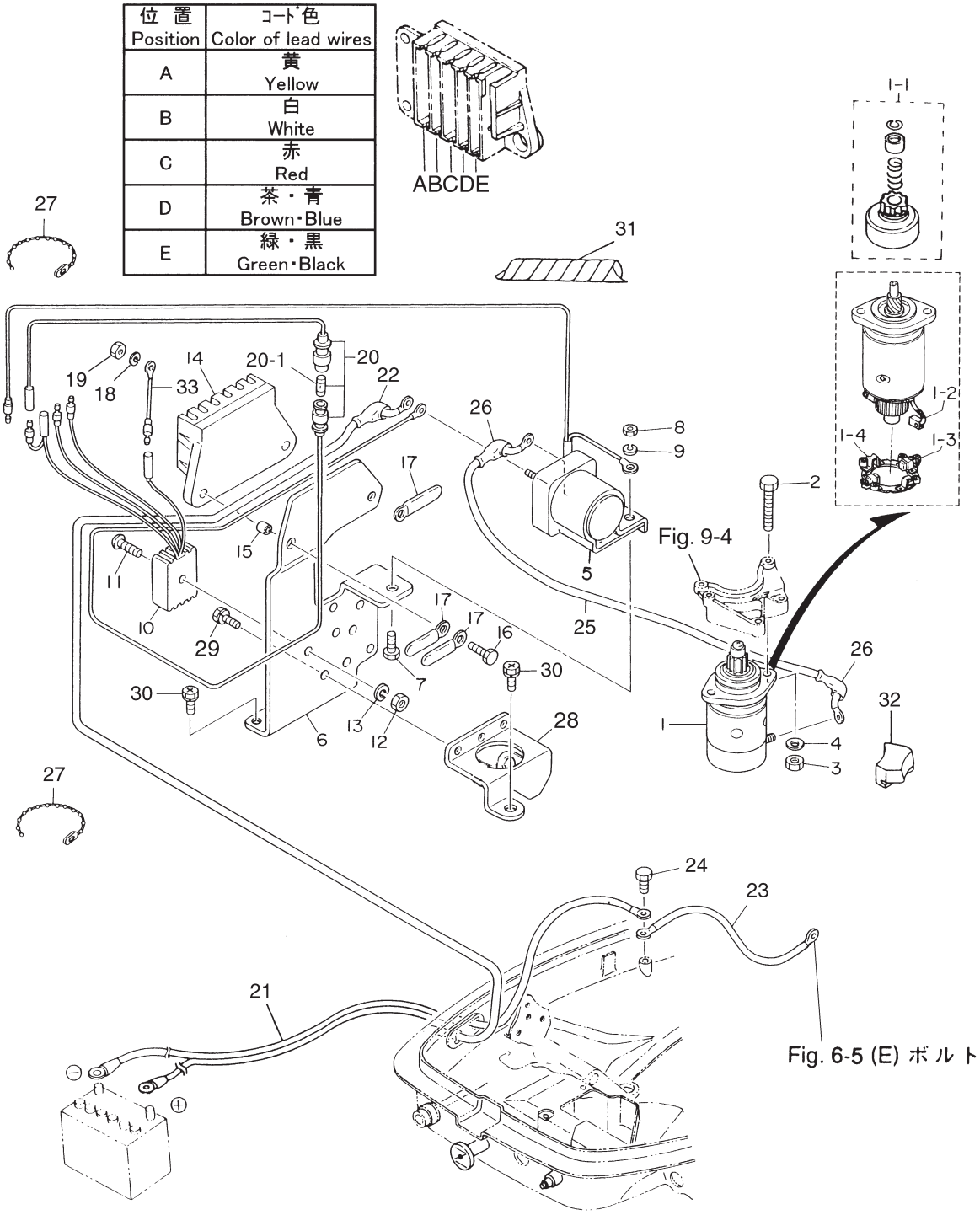

見出番号 Ref. No.	部品番号 Part No.	部　品　名 Description	個数 Q'ty 30 A4	 25 C3		備　考 Remarks
19-1	346-76010-0	ｽﾀｰﾀﾓｰﾀ Starter Motor	1	1		
19-1-1	346-76015-0	ﾋﾟﾆｵﾝ ＊ Pinion	1	1		
19-1-2	346-76012-0	ｶｰﾎﾞﾝﾌﾞﾗｼ（＋） ＊ Positive Brush（＋）	2	2		
19-1-3	346-76013-0	ｶｰﾎﾞﾝﾌﾞﾗｼ（－） ＊ Negative Brush（－）	1	1		
19-1-4	346-76014-0	ﾌﾞﾗｼﾎﾙﾀﾞ ＊ Brush Holder	1	1		
19-2	916103-0835	ﾎﾞﾙﾄ Bolt	2	2		
19-3	930103-0800	ﾅｯﾄ Nut	2	2		
19-4	941303-0800	ｽﾌﾟﾘﾝｸﾞﾜｯｼｬ Spring Washer	2	2		
19-5	346-76040-0	ｽﾀｰﾀｿﾚﾉｲﾄﾞ Starter Solenoid	1	1		
19-6	346-76043-1	ｽﾀｰﾀｿﾚﾉｲﾄﾞﾌﾞﾗｹｯﾄ Starter Solenoid Bracket	1	1		
19-7	910103-0616	ﾎﾞﾙﾄ Bolt	1	1		
19-8	930103-0600	ﾅｯﾄ Nut	1	1		
19-9	941303-0600	ｽﾌﾟﾘﾝｸﾞﾜｯｼｬ Spring Washer	1	1		
19-10	3G2-76060-0	ﾚｸﾁﾌｧｲｱ Rectifier	1	1		30A4 # 35175～ 25C3 # 50039～
19-11	921503-0525	ｽｸﾘｭ Screw	1	1		
19-12	930103-0500	ﾅｯﾄ Nut	1	1		
19-13	941303-0500	ｽﾌﾟﾘﾝｸﾞﾜｯｼｬ Spring Washer	1	1		
19-14	353-06281-0	ｹｰﾌﾞﾙﾀｰﾐﾅﾙﾎﾙﾀﾞ Cable Terminal Holder	1	1		
19-15	353-06283-0	ｶﾗｰ、6.4-10-4.7 Collar, 6.4-10-4.7	2	2		
19-16	910103-0620	ﾎﾞﾙﾄ Bolt	2	2		
19-17	309-06972-0	ｸﾗﾝﾌﾟ、6.5-47.5P Clamp, 6.5-47.5P	3	3		
19-18	941303-0600	ｽﾌﾟﾘﾝｸﾞﾜｯｼｬ Spring Washer	2	2		
19-19	930103-0600	ﾅｯﾄ Nut	1	1		
19-20	3B2-76062-0	ﾋｭｰｽﾞﾜｲﾔ Fuse Cable	1	1		L=355
19-20-1	346-76212-0	ﾋｭｰｽﾞ（15A） ＊ Fuse (15A)	1	1		
19-21	3B2-76120-0	ﾊﾞｯﾃﾘｺｰﾄﾞ Battery Cable	1	1		L=2000
19-22	3B7-76145-0	ﾀｰﾐﾅﾙｷｬｯﾌﾟ Terminal Cap	1	1		
19-23	334-76141-0	ｱｰｽｺｰﾄﾞ Ground Cable	1	1		L=150
19-24	910103-0612	ﾎﾞﾙﾄ Bolt	1	1		
19-25	3B2-76147-1	ｽﾀｰﾀｺｰﾄﾞ Starter Cable	1	1		L=200

オプショナルパーツ (II) エレクトリックスタータ (P, F タイ プ共通)

Fig. 19 OPTIONAL PARTS (II) ELECTRIC STARTER (Common use for P & F types)

位 置 Position	ｺｰﾄﾞ色 Color of lead wires
A	黄 Yellow
B	白 White
C	赤 Red
D	茶・青 Brown・Blue
E	緑・黒 Green・Black

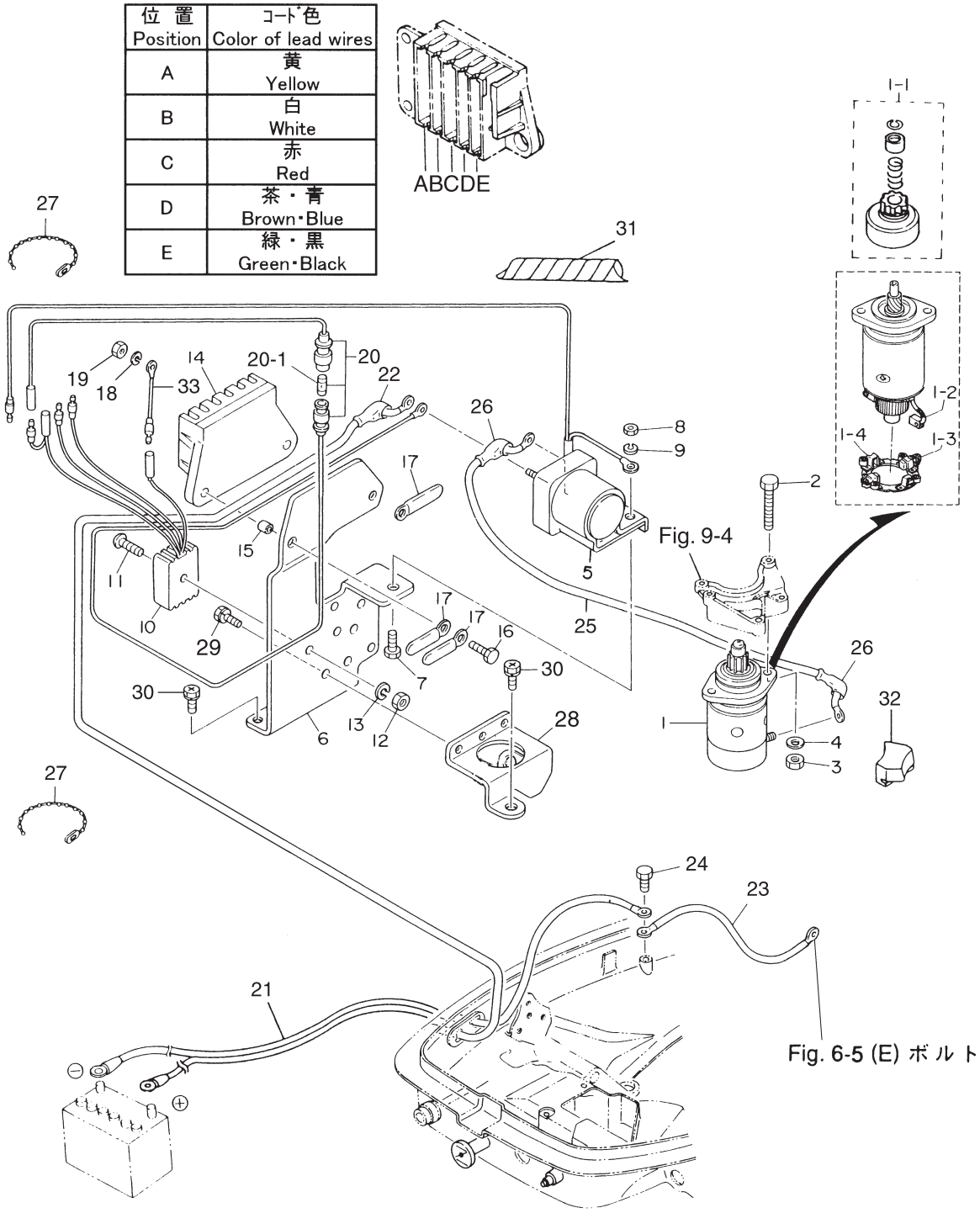

見出番号 Ref. No.	部品番号 Part No.	部　品　名 Description	個数 Q'ty 30 A4	 25 C3		備　考 Remarks
19-26	3A3-76145-0	ﾀｰﾐﾅﾙｷｬｯﾌﾟ Terminal Cap	2	2		
19-27	336-76091-0	ﾘｰﾄﾞﾜｲﾔﾊﾞﾝﾄﾞ Lead Wire Band	3	3		
19-28	346-76081-0	ﾆｭｰﾄﾗﾙｽｲｯﾁﾌﾞﾗｹｯﾄ Neutral Switch Bracket	1	1		
19-29	910403-6508	ﾎﾞﾙﾄ Bolt	3	3		or 910903-6508
19-30	910403-6616	ﾎﾞﾙﾄ Bolt	3	3		or 910903-6616
19-31	361-76149-0	ｺｲﾙﾁｭｰﾌﾞ Coil Tube	1	1		
19-32	346-76007-0	ｽﾀｰﾀﾓｰﾀﾀﾞﾝﾊﾟ Starter Motor Damper	1	1		
19-33	3G2-76142-0	ｱｰｽﾜｲﾔ Ground Cable	1	1		30A4 # 35175～ 25C3 # 50039～

オプショナルパーツ (III) エレクトリックスタータ (P, F タイプ各専用)

Fig. 20 OPTIONAL PARTS (III) ELECTRIC STARTER (Exclusive use for P & F types respectively)

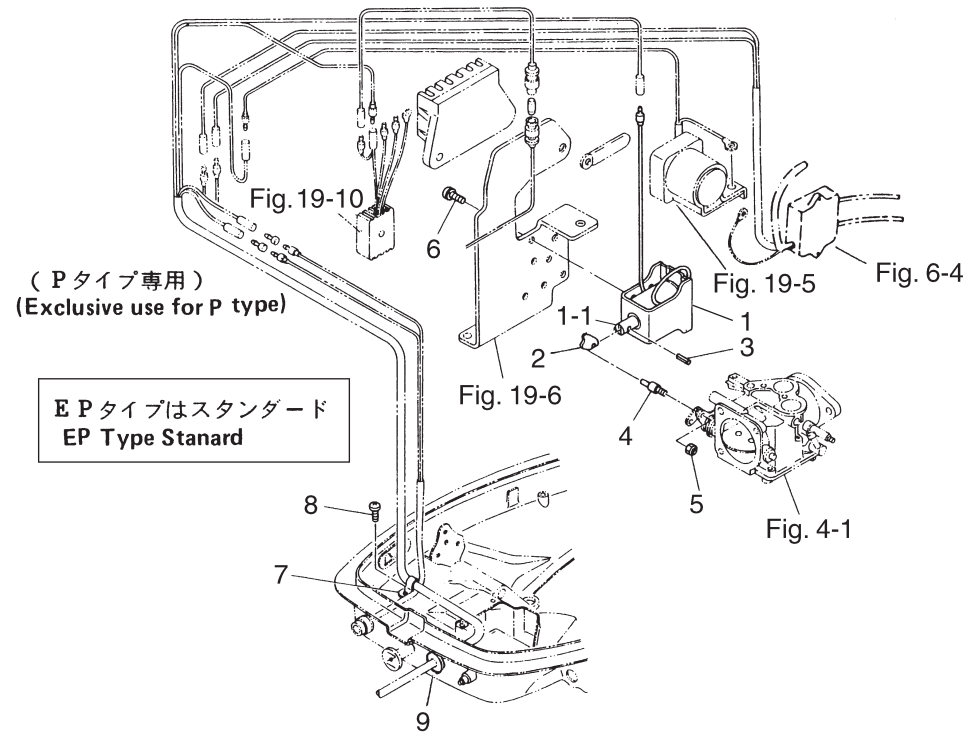

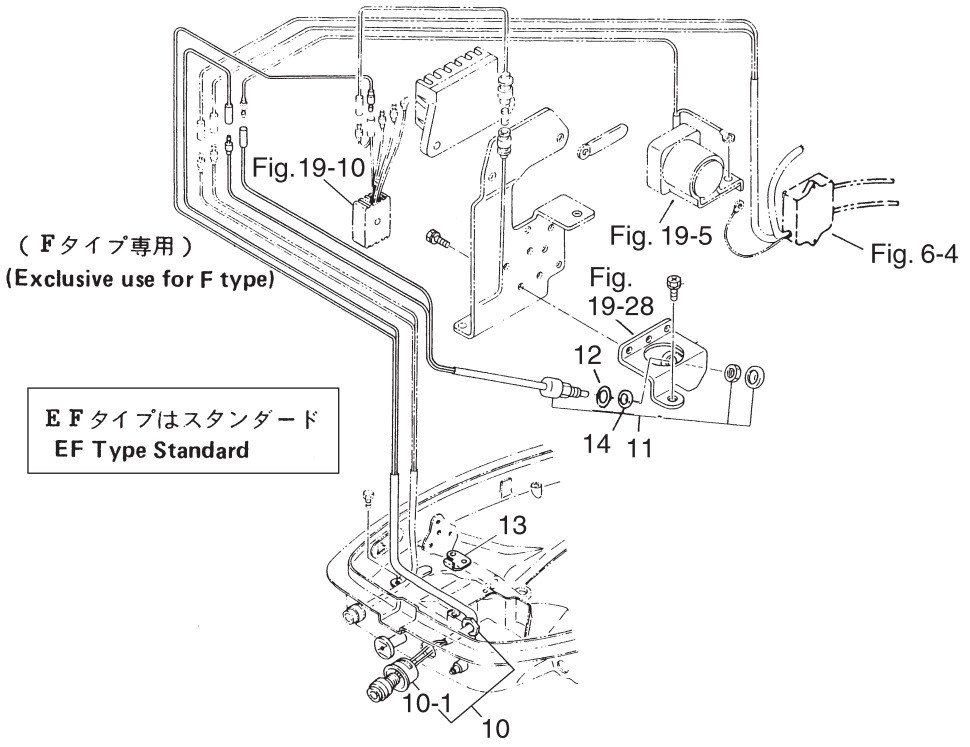

見出番号 Ref. No.	部品番号 Part No.	部　品　名 Description	個数 Q'ty 30 A4	 25 C3		備　考 Remarks
20-1	361-76050-0	ﾁｮｰｸｿﾚﾉｲﾄﾞ Choke Solenoid	1	1		
20-1-1	361-76073-0	ﾁｮｰｸｿﾚﾉｲﾄﾞﾌﾟﾗﾝｯｼﾞｬ * Choke Solenoid Plunger	1	1		
20-2	346-76057-0	ﾁｮｰｸｿﾚﾉｲﾄﾞﾌｯｸ Choke Solenoid Hook	1	1		
20-3	951403-0312	ｽﾌﾟﾘﾝｸﾞﾋﾟﾝ、3-12 Spring Pin, 3-12	1	1		
20-4	346-76072-1	ﾁｮｰｸｼｬﾌﾄﾛｯﾄﾞ Chock Shaft Rod	1	1		
20-5	930403-0400	ﾅｲﾛﾝﾅｯﾄ、4P-0.7 Nylon Nut, 4P-0.7	1	1		
20-6	921503-6408	ｽｸﾘｭ Screw	3	3		
20-7	336-06973-0	ｸﾗﾝﾌﾟ、6-9.5L Clamp, 6-9.5L	1	1		
20-8	921503-0612	ｽｸﾘｭ Screw	1	1		or 921513-0612
20-9	345-76023-0	ｸﾞﾛﾒｯﾄ、22-2.5 Grommet, 22-2.5	1	1		
20-10	361-76026-0	ﾒｲﾝｽｲｯﾁ Main Switch	1	1		
20-10-1	346-76039-1	ﾒｲﾝｽｲｯﾁﾌﾟﾛﾃｸﾀ * Main Switch Protector	1	1		
20-11	361-76080-0	ﾆｭｰﾄﾗﾙｽｲｯﾁ Neutral Switch	1	1		
20-12	3B7-63731-0	ﾜｯｼｬ、12.5-24-1 Washer, 12.5-24-1	1	1		
20-13	3A1-76082-0	ﾆｭｰﾄﾗﾙｽｲｯﾁｵﾍﾟﾚｰﾃｨﾝｸﾞﾚﾊﾞｰ Neutral Switch Operating Lever	1	1		ﾆｭｰﾄﾗﾙｽｲｯﾁﾌﾟﾚｰﾄ Neutral Switch Plate,
20-14	3M4-76084-0	ﾆｭｰﾄﾗﾙｽｲｯﾁｽﾍﾟｰｻ Neutral Switch Spacer	1	1		

オプショナルパーツ (IV) アクセサリー (1)
Fig. 21 OPTIONAL PARTS (IV) ACCESSORIES (1)

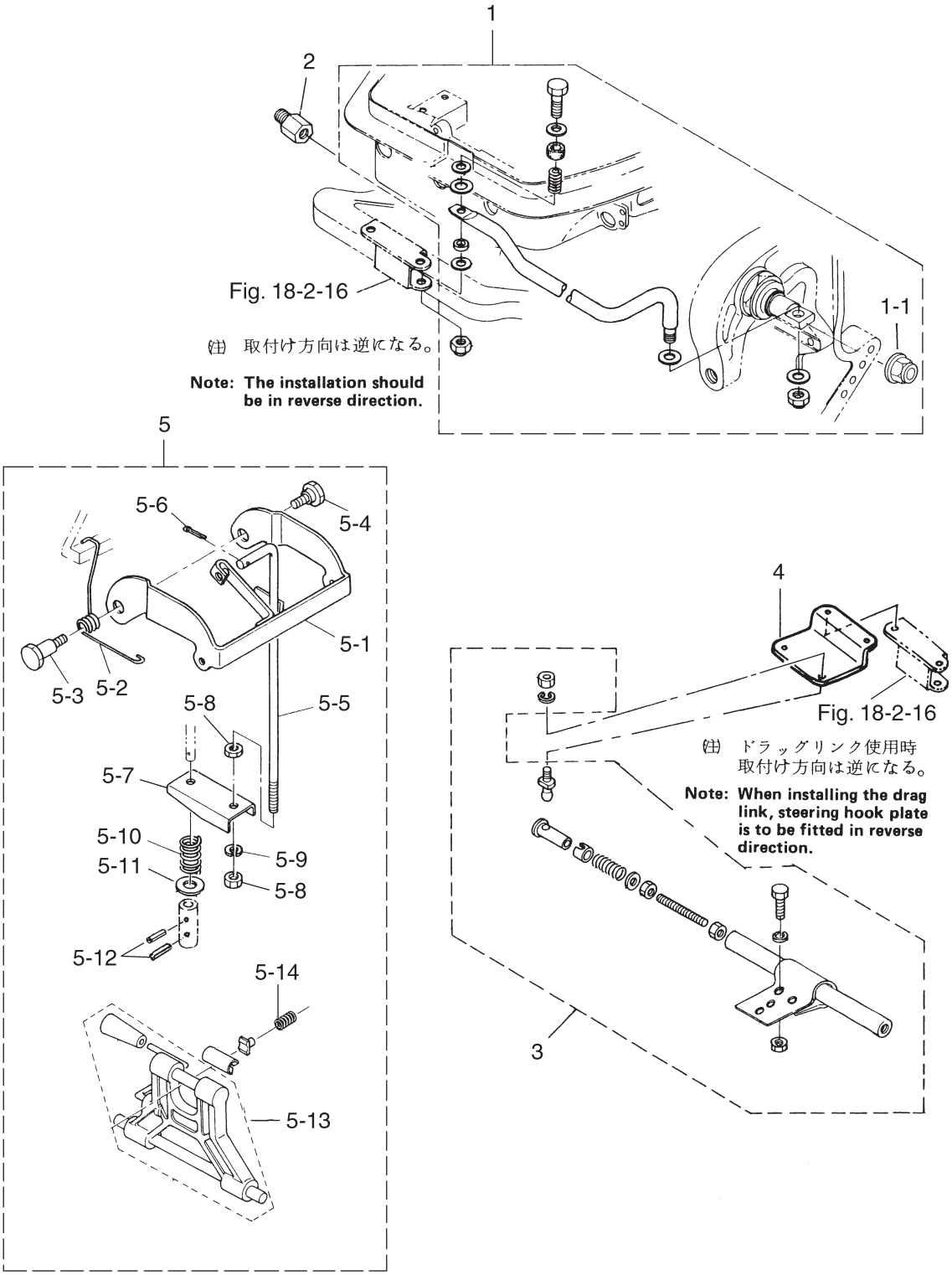

見出番号 Ref. No.	部品番号 Part No.	部　品　名 Description	個数 Q'ty 30 A4	 25 C3		備　考 Remarks
21-1	346-84905-1	ﾄﾞﾗｯｸﾘﾝｸ C ｱｯｼ Drag Link "C" Ass'y	1	1		
21-1-1	3F3-84908-0	ﾄﾞﾗｯｸﾘﾝｸｼｰﾙﾘﾝｸﾞ * Drag Link Seal Ring	1	1		
21-2	353-84904-0	ﾄﾞﾗｯｸﾘﾝｸｽﾍﾟｰｻ Drag Link Spacer	1	1		
21-3	3A3-84900-1	ﾀｲﾊﾞｰｷｯﾄ C Tie-Bar Kit "C"	1	1		
21-4	346-84901-0	ﾀｰﾝﾊﾞｯｸﾙﾌﾟﾚｰﾄ Turn Buckle Plate	2	2		
21-5	3P0-66901-0	ｼﾌﾄﾚﾊﾞｰﾘﾊﾞｰｽﾛｯｸｷｯﾄ Shift Lever Reverse Lock Kit	1	1		
21-5-1	346-66902-0	ﾘﾊﾞｰｽﾛｯｸ * Reverse Lock	1	1		ｾｯﾄ販売 to be Purchased as an Ass'y
21-5-2	346-66903-0	ﾘﾊﾞｰｽﾛｯｸｽﾌﾟﾘﾝｸﾞ * Reverse Lock Spring	1	1		
21-5-3	346-66904-0	ﾘﾊﾞｰｽﾛｯｸｱｰﾑｼｬﾌﾄ B * Reverse Lock Arm Shaft "B"	1	1		
21-5-4	332-66307-0	ﾘﾊﾞｰｽﾛｯｸｼｬﾌﾄ * Reverse Lock Shaft	1	1		
21-5-5	346-66908-0	ﾘﾊﾞｰｽﾛｯｸﾘﾝｸ * Reverse Lock Link	1	1		
21-5-6	951503-0212	ｽﾌﾟﾘｯﾄﾋﾟﾝ、2-12 * Split Pin, 2-12	1	1		
21-5-7	346-66905-0	ﾘﾊﾞｰｽﾛｯｸﾘﾝｸﾌﾟﾚｰﾄ * Reverse Lock Link Plate	1	1		
21-5-8	930103-0500	ﾅｯﾄ * Nut	1	1		
21-5-9	941303-0500	ｽﾌﾟﾘﾝｸﾞﾜｯｼｬ * Spring Washer	1	1		
21-5-10	346-66906-0	ﾘﾝｸﾌﾟﾚｰﾄｽﾌﾟﾘﾝｸﾞ * Link Plate Spring	1	1		
21-5-11	346-66909-0	ｽﾌﾟﾘﾝｸﾞﾎﾙﾀﾞ * Spring Holder	1	1		
21-5-12	951403-0312	ｽﾌﾟﾘﾝｸﾞﾋﾟﾝ、3-12 * Spring Pin, 3-12	2	2		
21-5-13	346S62431-0	ﾁﾙﾄｽﾄｯﾊﾟ * Tilt Stopper	1	1		
21-5-14	346-62421-1	ﾁﾙﾄｽﾄｯﾊﾟﾌﾘｸｼｮﾝｽﾌﾟﾘﾝｸﾞ * Tilt Stopper Friction Spring	1	1		

オプショナルパーツ (V) アクセサリー (2)
Fig. 22 OPTIONAL PARTS (V) ACCESSORIES (2)

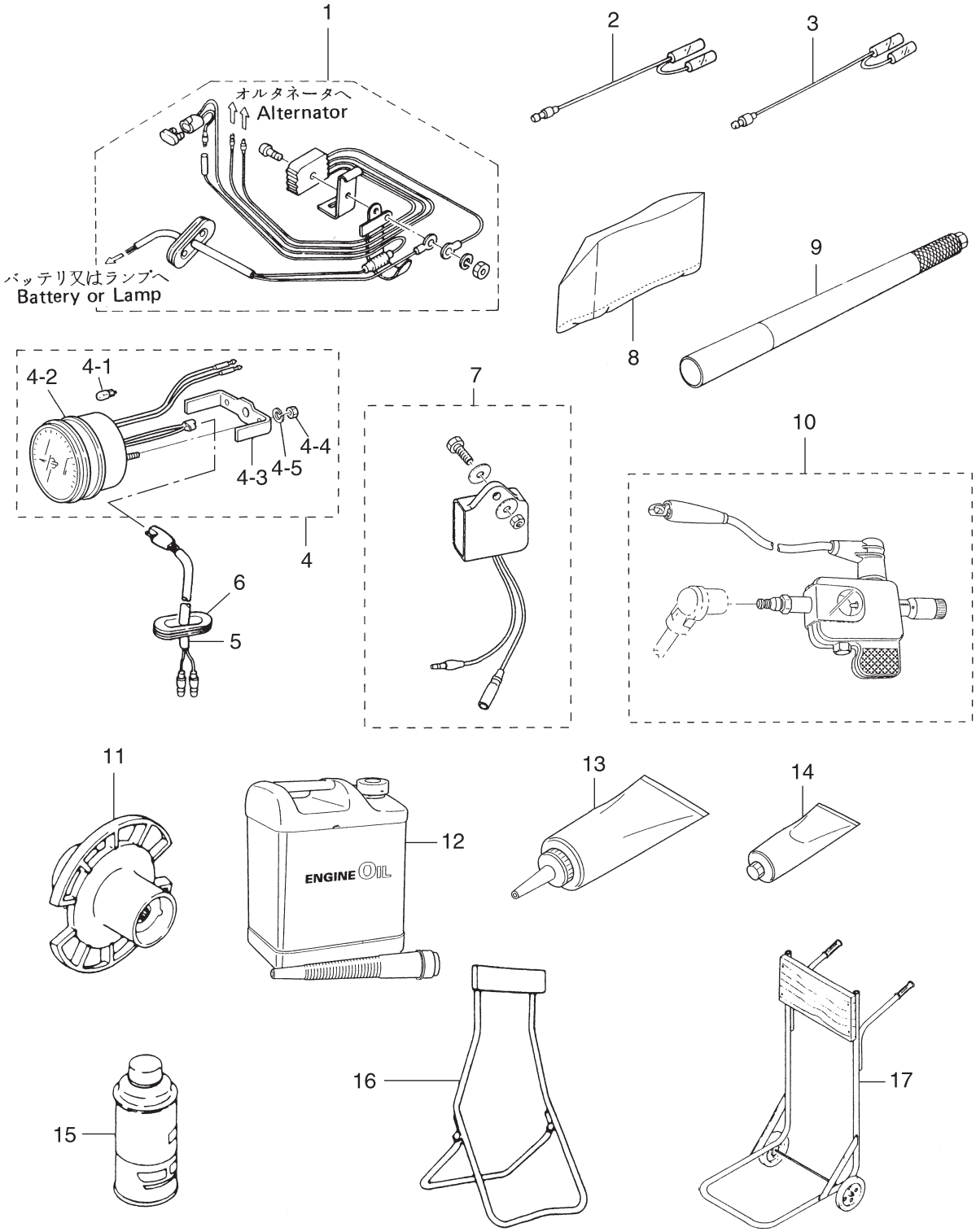

見出番号 Ref. No.	部品番号 Part No.	部　品　名 Description	個数 Q'ty 30 A4	 25 C3		備　考 Remarks
22-1	346-76160-2	ﾚｸﾁﾌｧｲｱｷｯﾄ Rectifier Kit	1	1		
22-2	361-72542-0	ｾﾊﾟﾚｰﾄｺｰﾄﾞ (ﾎﾜｲﾄ) Separate Cord (White)	1	1		
22-3	361-72543-0	ｾﾊﾟﾚｰﾄｺｰﾄﾞ (ｲｴﾛｰ) Separate Cord (Yellow)	1	1		
22-4	3B7-72530-2	ﾀｺﾒｰﾀ (ｵｲﾙﾗﾝﾌﾟ無) Tachometer (with out Oil Lamp)	1	1		
22-4-1	3B7-72659-0	ﾒｰﾀﾊﾞﾙﾌﾞ、12V-1.7W * Meter Bulb, 12V-1.7W	1	1		
22-4-2	3B7-72656-0	ﾒｰﾀﾀﾞﾝﾊﾟ * Meter Dumper	1	1		
22-4-3	3B7-72661-0	ﾌｨｯﾃｨﾝｸﾞﾌﾟﾚｰﾄ * Fitting Plate	1	1		
22-4-4	930203-0500	ﾅｯﾄ * Nut	2	2		
22-4-5	941303-0500	ｽﾌﾟﾘﾝｸﾞﾜｯｼｬ * Spring Washer	2	2		
22-5	361-72539-0	ﾀｺﾒｰﾀﾘｰﾄﾞﾜｲﾔ Tachometer Lead Cable	1	1		
22-6	345-67169-0	ｺｰﾄﾞｸﾞﾛﾒｯﾄ Cord Grommet	1	1		
22-7	3P0-72679-0	ﾀｺﾒｰﾀﾕﾆｯﾄｷｯﾄ Tachometer Unit Kit	1	1		30A4 # 35175～ 25C3 # 50039～
22-8	334-72312-0	ﾋﾞﾆｰﾙﾓｰﾀｶﾊﾞｰ (L) Vinyl Motor Cover (L)	1	1		UNIQUE
22-9	3A1-63039-0	ﾛﾝｸﾞﾊﾝﾄﾞﾙ 0.8m Long Handle 0.8m	1	1		
	3A1-63038-0	ﾛﾝｸﾞﾊﾝﾄﾞﾙ 1.0m Long Handle 1.0m	1	1		
22-10	3F3-72540-0	ｽﾊﾟｰｸﾃｽﾀ Spark Tester	1	1		
22-11	346-64111-5	ﾃｽﾄﾌﾟﾛﾍﾟﾗ Test Propeller	1	1		
22-12	3C7-72301-0	ｽｰﾊﾟｰｺﾞｰﾙﾄﾞ (0.4L) Tohatsu Super Gold (0.4liter)	1	1		Engine Oil N.A.F.N.
	3C7-72302-0	ｽｰﾊﾟｰｺﾞｰﾙﾄﾞ (1.0L) Tohatsu Super Gold (1.0liter)	1	1		Engine Oil N.A.F.N.
	3C7-72304-0	ｽｰﾊﾟｰｺﾞｰﾙﾄﾞ (4.0L) Tohatsu Super Gold (4.0liter)	1	1		Engine Oil N.A.F.N.
	3C7-72303-0	ｽｰﾊﾟｰｺﾞｰﾙﾄﾞ (20.0L) Tohatsu Super Gold (20.0liter)	1	1		Engine Oil N.A.F.N.
22-13	332-72306-0	ｷﾞﾔｵｲﾙ (500mL) Gear Oil (500mL)	1	1		20 tubes/case N.A.F.N.
22-14	332-72309-0	ｸﾞﾘｽ (250g) Grease (250g)	1	1		24 tubes/case N.A.F.N.
22-15	3AC-72326-0	ｽﾌﾟﾚｰ (ｱｸｱﾏﾘﾝﾌﾞﾙｰ) Touch-up Paint (Aquamarine Blue)	1	1		N.A.F.N.
22-16	332-72402-0	ｽﾀﾝﾄﾞ Stand	1	1		
22-17	332-72401-0	ｶｰﾄ Cart	1	1		

アッセンブリ、キット
Fig. 23 ASSEMBLY, KIT

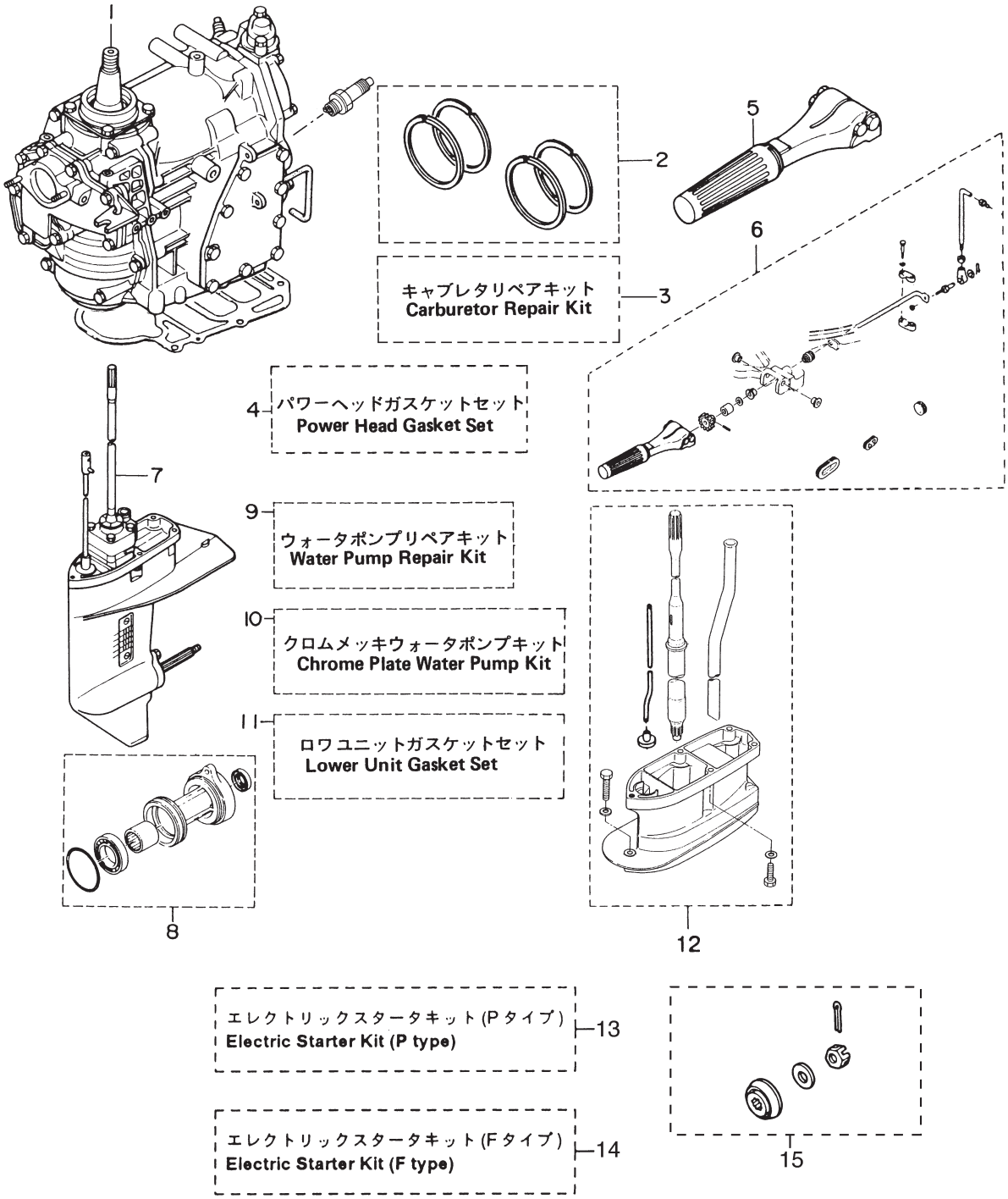

見出番号 Ref. No.	部品番号 Part No.	部　品　名 Description	個数 Q'ty 30 A4	 25 C3		備　考 Remarks
23-1	3P1B87100-1	ｴﾝｼﾞﾝｼｮｰﾄﾌﾞﾛｯｸ (新) Engine Short Block (New)	1	1		# 032359XD～ Crankshaft Clockwise Screw
23-2	346-87123-0	ﾋﾟｽﾄﾝ ﾘﾝｸﾞｾｯﾄ (Std) Piston Ring Set (Std)	1 set	1 set		
	346-00011-0	ﾋﾟｽﾄﾝ ﾘﾝｸﾞ (Std) ＊ Piston Ring (Std)	4	4		
23-2	346-87124-0	ﾋﾟｽﾄﾝ ﾘﾝｸﾞｾｯﾄ (0.5mm O/S) Piston Ring Set (0.5mm O/S)	1 set	1 set		
	346-00014-0	ﾋﾟｽﾄﾝ ﾘﾝｸﾞ (0.5mm O/S) ＊ Piston Ring (0.5mm O/S)	4	4		
23-3	346-87122-0	ｷｬﾌﾞﾚﾀﾘﾍﾟｱｷｯﾄ Carburetor Repair Kit	1 set	1 set		
	346-02011-0	ｷｬﾌﾞﾚﾀｶﾞｽｹｯﾄ ＊ Carburetor Gasket	1	1		
	922503-6414	ｽｸﾘｭ ＊ Screw	4	4		
	346-03222-0	ﾌﾛｰﾄﾁｬﾝﾊﾞ O ﾘﾝｸﾞ ＊ Float Chamber O-Ring	1	1		
	346-03231-0	ﾌﾛｰﾄ ＊ Float	1	1		
	346-03232-0	ﾌﾛｰﾄｱｰﾑﾋﾟﾝ ＊ Float Arm Pin	1	1		
	3B7-03240-0	ﾌﾛｰﾄﾊﾞﾙﾌﾞ ＊ Float Valve	1	1		
	334-03242-0	ﾊﾞﾙﾌﾞﾋﾟﾝ ＊ Valve Pin	1	1		
	344-03244-0	ｸﾘｯﾌﾟ ＊ Clip	1	1		
	346-03256-0	ﾗﾊﾞｰｷｬｯﾌﾟ ＊ Rubber Cap	1	1		
	346-03265-0	ｽﾄｯﾌﾟｽｸﾘｭ ＊ Stop Screw	1	1		
	346-03266-0	ｱｼﾞｬｽﾄｽｸﾘｭ ＊ Adjusting Screw	1	1		
	336-03293-0	ﾄﾞﾚﾝｽｸﾘｭ O ﾘﾝｸﾞ ＊ Drain Screw O-Ring	1	1		
23-4	3A1-87121-1	ﾊﾟﾜｰﾍｯﾄﾞｶﾞｽｹｯﾄｾｯﾄ Power Head Gasket Set	1 set	1 set		
	346-01005-0	ｼﾘﾝﾀﾞﾍｯﾄﾞｶﾞｽｹｯﾄ ＊ Cylinder Head Gasket	1	1		
	346-01032-0	ｻｰﾓｽﾀｯﾄｷｬｯﾌﾟｶﾞｽｹｯﾄ ＊ Thermostat Cap Gasket	1	1		
	346-02305-0	ｴｷｿﾞｰｽﾄｶﾊﾞｰｶﾞｽｹｯﾄ ＊ Exhaust Cover Gasket	1	1		
	126-00121-0	ｵｲﾙｼｰﾙ、30-45-8 ＊ Oil Seal, 30-45-8	1	1		Upper side
	346-00122-0	ｵｲﾙｼｰﾙ、24-40-8 ＊ Oil Seal, 24-40-8	1	1		Lower side
	338-01403-0	O ﾘﾝｸﾞ、2-55.5 ＊ O-Ring, 2-55.5	1	1		Magnet Basement
	346-01215-0	ｵｲﾙｼｰﾙ、16-28-6 ＊ Oil Seal, 16-28-6	1	1		Drive Shaft
	346-01216-0	O ﾘﾝｸﾞ、1.7-59 ＊ O-Ring, 1.7-59	1	1		Crank Case Head

見出番号 Ref. No.	部品番号 Part No.	部　品　名 Description	個数 Q'ty 30 A4	 25 C3		備　考 Remarks
23-4	346-02011-0	ｷｬﾌﾞﾚﾀｶﾞｽｹｯﾄ ＊ Carburetor Gasket	1	1		
	346-04901-0	ﾌｭｴﾙﾎﾟﾝﾌﾟｶﾞｽｹｯﾄ ＊ Fuel Pump Gasket	1	1		
	346-01303-0	ｴﾝｼﾞﾝﾍﾞｰｽｶﾞｽｹｯﾄ ＊ Engine Basement Gasket	1	1		
23-5	398Q63003-0	ﾃｨﾗﾊﾝﾄﾞﾙｱｯｼ Tiller Handle Ass'y	1	1		
23-6	3P0Q63000-1	ﾃｨﾗﾊﾝﾄﾞﾙｷｯﾄ Tiller Handle Kit	1 set	1 set		
	398Q63003-0	ﾃｨﾗﾊﾝﾄﾞﾙｱｯｼ ＊ Tiller Handle Ass'y	1	1		
	346-63201-1	ﾎﾞﾙﾄ ＊ Bolt	2	2		
	345-63207-0	ｶﾗｰ、9.8-12-7.5 ＊ Collar, 9.8-12-7.5	2	2		
	346-63064-0	ﾕﾆﾊﾞｰｻﾙﾋﾟﾆｵﾝ ＊ Universal Pinion	1	1		
	346-63061-2	ｽﾛｯﾄﾙｼｬﾌﾄ B ＊ Throttle Shaft "B"	1	1		
	951403-0414	ｽﾌﾟﾘﾝｸﾞﾋﾟﾝ、4-14 ＊ Spring Pin, 4-14	1	1		
	346-63066-1	ｶﾗｰ、15.9-17.1-9 ＊ Collar, 15.9-17.1-9	1	1		
	940103-0800	ﾜｯｼｬ ＊ Washer	1	1		or 940113-0800
	350-63046-0	ﾌﾞｯｼﾝｸﾞ、8.4-10-11 ＊ Bushing, 8.4-10-11	1	1		
	345-63063-0	ｽﾛｯﾄﾙｼｬﾌﾄｻﾎﾟｰﾀ ＊ Throttle Shaft Supporter	2	2		
	910114-0630	ﾎﾞﾙﾄ ＊ Bolt	2	2		
	940103-0600	ﾜｯｼｬ ＊ Washer	2	2		or 940113-0600
	345-66226-0	ｽﾛｯﾄﾙｼｬﾌﾄｸﾞﾛﾒｯﾄ ＊ Throttle Shaft Grommet	1	1		
	348-63715-1	ﾘﾝｸﾛｯﾄﾞ、5-75L ＊ Link Rod, 5-75L	1	1		30A4 # 35175～ 25C3 # 50039～
	930103-0500	ﾅｯﾄ ＊ Nut	1	1		
	3B7-63733-0	ﾛｯﾄﾞｽﾅｯﾌﾟ、5-3 ＊ Rod Snap, 5-3	1	1		
	346-05234-0	φ5 ﾛｯﾄﾞｼﾞｮｲﾝﾄ ＊ φ5 Rod Joint	1	1		
	353-83728-1	ｹｰﾌﾞﾙﾋﾟﾝ ＊ Cable Pin	1	1		
	930103-0600	ﾅｯﾄ ＊ Nut	1	1		
	3AA-83719-0	ﾜｯｼｬ、8.5-18-1.6 ＊ Washer, 8.5-18-1.6	1	1		or 353-83719-0
	951603-0800	ｽﾅｯﾌﾟﾋﾟﾝ、d=8 ＊ Snap Pin, d=8	1	1		
23-7	346Q87301-6	ﾛﾜﾕﾆｯﾄｱｯｼ S Lower Unit Ass'y "S"	1	1		For Transom "S"
	346Q87302-6	ﾛﾜﾕﾆｯﾄｱｯｼ L Lower Unit Ass'y "L"	1	1		For Transom "L"

見出番号 Ref. No.	部品番号 Part No.	部　品　名 Description	個数 Q'ty 30 A4	 25 C3		備　考 Remarks
23-8	346Q87323-5	ﾌﾟﾛﾍﾟﾗｼｬﾌﾄﾊｳｼﾞﾝｸﾞｱｯｼ Propeller Shaft Housing Ass'y	1	1		
23-9	361-87322-0	ｳｫｰﾀﾎﾟﾝﾌﾟﾘﾍﾟｱｷｯﾄ Water Pump Repair Kit	1 set	1 set		
	345-65021-0	ｳｫｰﾀﾎﾟﾝﾌﾟｲﾝﾍﾟﾗ ＊ Water Pump Impeller	1	1		
	332-65022-0	ｳｫｰﾀﾎﾟﾝﾌﾟｲﾝﾍﾟﾗｷｰ ＊ Water Pump Impeller Key	1	1		
	348-65011-0	ﾎﾟﾝﾌﾟｹｰｽﾗｲﾅ ＊ Pump Case Liner	1	1		
	348-65025-0	ｳｫｰﾀﾎﾟﾝﾌﾟｶﾞｲﾄﾞﾌﾟﾚｰﾄ ＊ Water Pump Guide Plate	1	1		
	348-65029-1	ﾎﾟﾝﾌﾟｶﾞｲﾄﾞﾌﾟﾚｰﾄｶﾞｽｹｯﾄ ＊ Pump Guide Plate Gasket	1	1		
	348-65018-0	ﾎﾟﾝﾌﾟｹｰｽｶﾞｽｹｯﾄ (ｱｯﾊﾟ) ＊ Pump Case Gasket (Upper)	1	1		
	910113-5652	ﾎﾞﾙﾄ ＊ Bolt	4	4		
23-10	361-65231-0	ｳｫｰﾀﾎﾟﾝﾌﾟｷｯﾄ (ｸﾛﾑﾒｯｷ) Water Pump Kit (Chrome Plated)	1 set	1 set		
	345-65021-0	ｳｫｰﾀﾎﾟﾝﾌﾟｲﾝﾍﾟﾗ ＊ Water Pump Impeller	1	1		
	361-65238-0	ﾎﾟﾝﾌﾟｹｰｽﾗｲﾅ (ｸﾛﾑﾒｯｷ) ＊ Pump Case Liner (Chrome Plated)	1	1		
	361-65239-0	ﾎﾟﾝﾌﾟｶﾞｲﾄﾞﾌﾟﾚｰﾄ (ｸﾛﾑﾒｯｷ) ＊ Pump Guide Plate (Chrome Plated)	1	1		
	348-65029-1	ﾎﾟﾝﾌﾟｶﾞｲﾄﾞﾌﾟﾚｰﾄｶﾞｽｹｯﾄ ＊ Pump Guide Plate Gasket	1	1		
	348-65018-0	ﾎﾟﾝﾌﾟｹｰｽｶﾞｽｹｯﾄ (ｱｯﾊﾟ) ＊ Pump Case Gasket (Upper)	1	1		
23-11	346-87321-6	ﾛﾜﾕﾆｯﾄｶﾞｽｹｯﾄｾｯﾄ Lower Unit Gasket Set	1 set	1 set		
	332-60006-0	ｶﾞｽｹｯﾄ、8.2-14-1 ＊ Gasket, 8.2-14-1	3	3		
	332-60103-0	O ﾘﾝｸﾞ、3-62.5 ＊ O-Ring, 3-62.5	1	1		Propeller Shaft
	346-60111-0	ｵｲﾙｼｰﾙ、18-28-8 ＊ Oil Seal, 18-28-8	1	1		Propeller Shaft
	346-65013-0	ｵｲﾙｼｰﾙ、17-30-9 ＊ Oil Seal, 17-30-9	1	1		Pump Case Lower
	336-62415-0	O ﾘﾝｸﾞ、3.5-36 ＊ O-Ring, 3.5-36	1	1		Pump Case Lower
	348-65029-1	ﾎﾟﾝﾌﾟｶﾞｲﾄﾞﾌﾟﾚｰﾄｶﾞｽｹｯﾄ ＊ Pump Guide Plate Gasket	1	1		
	348-65018-0	ﾎﾟﾝﾌﾟｹｰｽｶﾞｽｹｯﾄ (ｱｯﾊﾟ) ＊ Pump Case Gasket (Upper)	1	1		
	332-66021-0	O ﾘﾝｸﾞ、2.4-5.8 ＊ O-Ring, 2.4-5.8	1	1		
	3C8-66032-0	O ﾘﾝｸﾞ、3.5-21.7 ＊ O-Ring, 3.5-21.7	1	1		
23-12	346Q87314-6	ｴｸｽﾃﾝｼｮﾝﾊｳｼﾞﾝｸﾞｷｯﾄ UL Extension Housing Kit "UL"	1	1		(30A3 # 30720～) (25C2 # 40911～)

見出番号 Ref. No.	部品番号 Part No.	部　品　名 Description	個数 Q'ty 30 A4	 25 C3		備　考 Remarks
23-13	3P0-76000-0	ｴﾚｸﾄﾘｯｸｽﾀｰﾀｷｯﾄ (P ﾀｲﾌﾟ) Electric Starter Kit ("P" Type)	1 set	1 set		30A4 # 35175～ 25C3 # 50039～
	346-76010-0	ｽﾀｰﾀﾓｰﾀ ＊ Starter Motor	1	1		
	916103-0835	ﾎﾞﾙﾄ ＊ Bolt	2	2		
	930103-0800	ﾅｯﾄ ＊ Nut	2	2		
	941303-0800	ｽﾌﾟﾘﾝｸﾞﾜｯｼｬ ＊ Spring Washer	2	2		
	346-76040-0	ｽﾀｰﾀｿﾚﾉｲﾄﾞ ＊ Starter Solenoid	1	1		
	346-76043-1	ｽﾀｰﾀｿﾚﾉｲﾄﾞﾌﾞﾗｹｯﾄ ＊ Starter Solenoid Bracket	1	1		
	910103-0616	ﾎﾞﾙﾄ ＊ Bolt	1	1		
	930103-0600	ﾅｯﾄ ＊ Nut	1	1		
	941303-0600	ｽﾌﾟﾘﾝｸﾞﾜｯｼｬ ＊ Spring Washer	1	1		
	3G2-76060-0	ﾚｸﾁﾌｧｲｱ ＊ Rectifier	1	1		
	921503-0525	ｽｸﾘｭ ＊ Screw	1	1		
	930103-0500	ﾅｯﾄ ＊ Nut	1	1		
	941303-0500	ｽﾌﾟﾘﾝｸﾞﾜｯｼｬ ＊ Spring Washer	1	1		
	353-06281-0	ｹｰﾌﾞﾙﾀｰﾐﾅﾙﾎﾙﾀﾞ ＊ Cable Terminal Holder	1	1		
	353-06283-0	ｶﾗｰ、6.4-10-4.7 ＊ Collar, 6.4-10-4.7	2	2		
	910103-0620	ﾎﾞﾙﾄ ＊ Bolt	2	2		
	309-06972-0	ｸﾗﾝﾌﾟ、6.5-47.5P ＊ Clamp, 6.5-47.5P	3	3		
	941303-0600	ｽﾌﾟﾘﾝｸﾞﾜｯｼｬ ＊ Spring Washer	2	2		
	930103-0600	ﾅｯﾄ ＊ Nut	1	1		
	346-76081-0	ﾆｭｰﾄﾗﾙｽｲｯﾁﾌﾞﾗｹｯﾄ ＊ Neutral Switch Bracket	1	1		
	910403-6508	ﾎﾞﾙﾄ ＊ Bolt	3	3		
	910403-6616	ﾎﾞﾙﾄ ＊ Bolt	3	3		or 910903-6616
	3B2-76062-0	ﾋｭｰｽﾞﾜｲﾔ ＊ Fuse Cable	1	1		L=355
	3B2-76120-0	ﾊﾞｯﾃﾘｺｰﾄﾞ ＊ Battery Cable	1	1		L=2000
	3B7-76145-0	ﾀｰﾐﾅﾙｷｬｯﾌﾟ ＊ Terminal Cap	1	1		
	334-76141-0	ｱｰｽｺｰﾄﾞ ＊ Ground Cable	1	1		L=150
	910103-0612	ﾎﾞﾙﾄ ＊ Bolt	1	1		
	3B2-76147-1	ｽﾀｰﾀｺｰﾄﾞ ＊ Starter Cable	1	1		L=200
	3A3-76145-0	ﾀｰﾐﾅﾙｷｬｯﾌﾟ ＊ Terminal Cap	2	2		

見出番号 Ref. No.	部品番号 Part No.	部　品　名 Description	個数 Q'ty 30 A4	 25 C3		備　考 Remarks
23-13	336-76091-0	ﾘｰﾄﾞﾜｲﾔﾊﾞﾝﾄﾞ ＊ Lead Wire Band	2	2		
	361-76050-0	ﾁｮｰｸｿﾚﾉｲﾄﾞ ＊ Choke Solenoid	1	1		
	346-76057-0	ﾁｮｰｸｿﾚﾉｲﾄﾞﾌｯｸ ＊ Choke Solenoid Hook	1	1		
	951403-0312	ｽﾌﾟﾘﾝｸﾞﾋﾟﾝ、3-12 ＊ Spring Pin, 3-12	1	1		
	346-76072-1	ﾁｮｰｸｼｬﾌﾄﾛｯﾄﾞ ＊ Chock Shaft Rod	1	1		
	930403-0400	ﾅｲﾛﾝﾅｯﾄ、4P-0.7 ＊ Nylon Nut, 4P-0.7	1	1		
	921503-6408	ｽｸﾘｭ ＊ Screw	3	3		
	336-06973-0	ｸﾗﾝﾌﾟ、6-9.5L ＊ Clamp, 6-9.5L	1	1		
	921503-0612	ｽｸﾘｭ ＊ Screw	1	1		
	345-76023-0	ｸﾞﾛﾒｯﾄ、22-2.5 ＊ Grommet, 22-2.5	1	1		
	361-76149-0	ｺｲﾙﾁｭｰﾌﾞ ＊ Coil Tube	1	1		
	346-76007-0	ｽﾀｰﾀﾓｰﾀﾀﾞﾝﾊﾟ ＊ Starter Motor Damper	1	1		
	3G2-76142-0	ｱｰｽﾜｲﾔ ＊ Ground Cable	1	1		
23-14	3P0-76300-0	ｴﾚｸﾄﾘｯｸｽﾀｰﾀｷｯﾄ (F ﾀｲﾌﾟ) Electric Starter Kit (“F” Type)	1 set	1 set		30A4 # 35175～ 25C3 # 50039～
	346-76010-0	ｽﾀｰﾀﾓｰﾀ ＊ Starter Motor	1	1		
	916103-0835	ﾎﾞﾙﾄ ＊ Bolt	2	2		
	930103-0800	ﾅｯﾄ ＊ Nut	2	2		
	941303-0800	ｽﾌﾟﾘﾝｸﾞﾜｯｼｬ ＊ Spring Washer	2	2		
	346-76040-0	ｽﾀｰﾀｿﾚﾉｲﾄﾞ ＊ Starter Solenoid	1	1		
	346-76043-1	ｽﾀｰﾀｿﾚﾉｲﾄﾞﾌﾞﾗｹｯﾄ ＊ Starter Solenoid Bracket	1	1		
	910103-0616	ﾎﾞﾙﾄ ＊ Bolt	1	1		
	930103-0600	ﾅｯﾄ ＊ Nut	1	1		
	941303-0600	ｽﾌﾟﾘﾝｸﾞﾜｯｼｬ ＊ Spring Washer	1	1		
	3G2-76060-0	ﾚｸﾁﾌｧｲｱ ＊ Rectifier	1	1		
	921503-0525	ｽｸﾘｭ ＊ Screw	1	1		
	930103-0500	ﾅｯﾄ ＊ Nut	1	1		
	941303-0500	ｽﾌﾟﾘﾝｸﾞﾜｯｼｬ ＊ Spring Washer	1	1		
	353-06281-0	ｹｰﾌﾞﾙﾀｰﾐﾅﾙﾎﾙﾀﾞ ＊ Cable Terminal Holder	1	1		
	353-06283-0	ｶﾗｰ、6.4-10-4.7 ＊ Collar, 6.4-10-4.7	2	2		

見出番号 Ref. No.	部品番号 Part No.	部　品　名 Description	個数 Q'ty 30 A4	 25 C3		備　考 Remarks
23-14	910103-0620	ﾎﾞﾙﾄ ＊ Bolt	2	2		
	309-06972-0	ｸﾗﾝﾌﾟ、6.5-47.5P ＊ Clamp, 6.5-47.5P	3	3		
	941303-0600	ｽﾌﾟﾘﾝｸﾞﾜｯｼｬ ＊ Spring Washer	2	2		
	930103-0600	ﾅｯﾄ ＊ Nut	1	1		
	346-76081-0	ﾆｭｰﾄﾗﾙｽｲｯﾁﾌﾞﾗｹｯﾄ ＊ Neutral Switch Bracket	1	1		
	910403-6508	ﾎﾞﾙﾄ ＊ Bolt	3	3		
	361-76080-0	ﾆｭｰﾄﾗﾙｽｲｯﾁ ＊ Neutral Switch	1	1		
	3M4-76084-0	ﾆｭｰﾄﾗﾙｽｲｯﾁｽﾍﾟｰｻ ＊ Neutral Switch Spacer	1	1		
	3A1-76082-0	ﾆｭｰﾄﾗﾙｽｲｯﾁｵﾍﾟﾚｰﾃｨﾝｸﾞﾚﾊﾞｰ ＊ Neutral Switch Operating Lever	1	1		Neutral Switch Plate,
	3B7-63731-0	ﾜｯｼｬ、12.5-24-1 ＊ Washer, 12.5-24-1	1	1		
	910403-6616	ﾎﾞﾙﾄ ＊ Bolt	3	3		or 910903-6616
	3B2-76062-0	ﾋｭｰｽﾞﾜｲﾔ ＊ Fuse Cable	1	1		L=355
	3B2-76120-0	ﾊﾞｯﾃﾘｺｰﾄﾞ ＊ Battery Cable	1	1		L=2000
	3B7-76145-0	ﾀｰﾐﾅﾙｷｬｯﾌﾟ ＊ Terminal Cap	1	1		
	334-76141-0	ｱｰｽｺｰﾄﾞ ＊ Ground Cable	1	1		L=150
	910103-0612	ﾎﾞﾙﾄ ＊ Bolt	1	1		
	3B2-76147-1	ｽﾀｰﾀｺｰﾄﾞ ＊ Starter Cable	1	1		L=200
	3A3-76145-0	ﾀｰﾐﾅﾙｷｬｯﾌﾟ ＊ Terminal Cap	2	2		
	336-76091-0	ﾘｰﾄﾞﾜｲﾔﾊﾞﾝﾄﾞ ＊ Lead Wire Band	2	2		
	361-76026-0	ﾒｲﾝｽｲｯﾁ ＊ Main Switch	1	1		
	346-76007-0	ｽﾀｰﾀﾓｰﾀﾀﾞﾝﾊﾟ ＊ Starter Motor Damper	1	1		
	3G2-76142-0	ｱｰｽﾜｲﾔ ＊ Ground Cable	1	1		
23-15	3R0-87326-0	ﾌﾟﾛﾍﾟﾗﾊｰﾄﾞｳｴｱｷｯﾄ Propeller Hardware Kit	1 set	1 set		
	346-64231-5	ﾌﾟﾛﾍﾟﾗｽﾗｽﾄﾎﾙﾀﾞ ＊ Propeller Thrust Holder	1	1		
	346-64121-5	ﾌﾟﾛﾍﾟﾗﾅｯﾄ ＊ Propeller Nut	1	1		
	346-64124-5	ﾜｯｼｬ、12.5-32-2.5 ＊ Washer, 12.5-32-2.5	1	1		
	951503-0322	ｽﾌﾟﾘｯﾄﾋﾟﾝ、3-22 ＊ Split Pin, 3-22	1	1		

TOHATSU

TOHATSU CORPORATION

Address : 5-4,3-chome,Azusawa,Itabashi-ku,
TOKYO,174-0051 JAPAN
Phone : TOKYO (03)3966-3117
FAX : TOKYO (03)3966-2951
Website : www.tohatsu.co.jp

PARTS CENTER

Address : 4495-9,Shimodaira,Komagane-city,
Nagano399-4101,JAPAN
Phone : 0265(82)-1091
FAX : 0265(82)-1103

トーハツ船外機
パーツ　リスト

PARTS LIST

M 25C3
30A4

本　　社	〒174-0051	東京都板橋区小豆沢3-5-4	03(3966)3116
マリン九州	〒816-0092	福岡市博多区東那珂2-10-55	092(411)8770
マリン関西	〒530-0043	大阪市北区天満1-8-27	06(6358)2971
マリン中部	〒440-0069	愛知県豊橋市御園町7-12	0532(54)5551
マリン関東	〒174-0051	東京都板橋区小豆沢3-5-4	03(3966)2222
マリン東北	〒981-1106	仙台市太白区柳生2-23-1	022(306)9131
マリン北海道	〒060-0031	札幌市中央区北一条東11丁目22-41	011(241)8301

002-21025-6
0601-NB500